Agenda Item No. F-3

DATE SUBMITTED	05/15/15	COUNCIL ACTION	(X)
SUBMITTED BY	PLANNING DIRECTOR	PUBLIC HEARING REQUIRED	( )
		RESOLUTION	( )
		ORDINANCE 1ST READING	( )
DATE ACTION REQUIRED	05/20/15	ORDINANCE 2ND READING	( )
		CITY CLERK'S INITIALS	( )

IMPERIAL CITY COUNCIL
AGENDA ITEM

SUBJECT: DISCUSSION/ACTION: PUBLIC LIBRARY CONSTRUCTION PLANS

1. PUBLIC LIBRARY CONSTRUCTION PLANS PRESENTATION

DEPARTMENT INVOLVED: BUILDING AND SAFETY/LIBRARY

BACKGROUND/SUMMARY:

Construction plans were prepared by the Building and Safety staff and VEXER Engineering as the local consultant. The Public Library design has been reviewed and approved by staff on May 14, 2015. The plans took into consideration systematic deficiencies in the building envelope, security and safety, Mechanical, Electrical and Plumbing systems, and interior lighting.

The construction and renovation include a newly added 4,874 square feet addition and a 7,124 square feet tenant improvement with a total area of 11,998 square feet . (See attached construction plans). The public library design includes, building addition, façade renovation, fire sprinkler system and fire alarm, change of voltage (120/208V) ADA spaces, LED lighting, EOC accommodations, and be a Solar ready building.

It is anticipated that construction initiates August 15, 2015

FISCAL IMPACT: ***$1,173,931*** F.O. INITIALS: _____

STAFF RECOMMENDATION:

Approve Building Plans for Construction

MANAGER'S RECOMMENDATION: MANAGER'S INITIALS

MOTION:

APPROVED ( ) REJECTED ( )

SECONDED:
AYES:
NAYES:
ABSENT:

DISAPPROVED ( ) DEFERRED ( )

REFERRED TO:

CITY OF IMPERIAL PUBLIC LIBRARY EXPANSION PROJECT

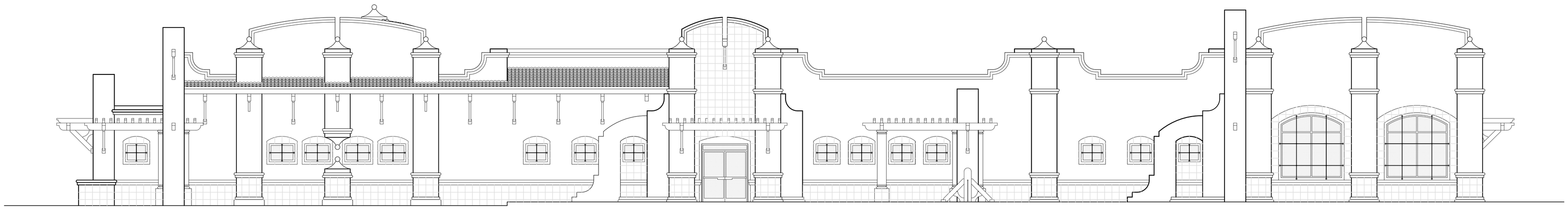

GOVERNING CODES

2013 CALIFORNIA BUILDING CODE
2013 CALIFORNIA MECHANICAL CODE
2013 CALIFORNIA PLUMBING CODE
2013 CALIFORNIA ELECTRICAL CODE

ASSESSOR'S PARCEL NO.

APN 064-051-004

EXITING CONCEPT:

OCCUPANTS OF THIS TENANT IMPROVEMENT WILL EITHER EXIT THEIR OFFICE, STUDY, READING OR CONSULTING AREA AND IMMEADIATELY BE IN A HALLWAY OR INTERVENING ROOM THAT WILL BE LEAD THE OCCUPANT DIRECTLY TO THE EXIT-ACCESS DOORWAY.

PER SECTION 1014.2 TRAVEL THROUGH INTERVENING ROOMS

MEANS OF EGRESS CALCS.

NEW ADDITION AREA:	4,874 S.F.
TOTAL AREA:	11,998 S.F.
NUMBER OF EXITS REQUIRED:	2
NUMBER OF EXITS PROVIDED:	6

PROJECT DIRECTORY

SHELL BUILDING OWNER:	CITY OF IMPERIAL 420 S. IMPERIAL AVE. IMPERIAL, CA. 92251
ENGINEER:	VEXER ENGINEERING 653 W. MAIN ST. SUITE 103 EL CENTRO, CA. 92243 PHONE (760) 352-8100
ELECTRICAL DESIGNER:	JOSE LUIS REYES LEMUS P.E. 23 JEFFERNAN AVENUE P.O. BOX 9015-930 CALEXICO, CA. 92231
TITLE 24:	GUILLERMO GARCIA GMG GRAPHICS ENERGY COMPLIANCE ANALYSIS P.O. BOX 1560 EL CENTRO, CA. 92243 PHONE (760) 791-1961
GEOTECHNICAL ENGINEER:	JEFFREY O. LYON P.E. LANDMARK CONSULTANTS, INC. 780 N. 4TH ST. EL CENTRO CA. 92243 PHONE (760) 370-3000

PROJECT ADDRESS:

220 & 240 W. 9TH ST. IMPERIAL, CA. 92251

DECLARATION OF RESPONSIBLE CHARGE

I HEREBY DECLARE THAT I AM THE ENGINEER OF THE WORK OF THIS PROJECT, THAT I HAVE EXERCISED RESPONSIBLE CHARGE OVER THE DESIGN OF THE PROJECT AS DEFINED IN SECTION 6703 OF THE BUSINESS AND PROFESSIONS CODE AND THAT THE DESIGN IS CONSISTENT WITH CURRENT STANDARDS.

I UNDERSTAND THAT CHECK OF THE PROJECT DRAWINGS AND SPECIFICATIONS BY THE CITY OF IMPERIAL IS CONFINED TO REVIEW ONLY AND DOES NOT RELIEVE ME, AS ENGINEER OF WORK, OF MY RESPONSIBILITY FOR PROJECT DESIGN.

ROBERTO MARTINEZ
VEXER ENGINEERING
653 W. MAIN ST. SUITE 103
EL CENTRO, CA. 92243
PHONE (760) 352-8100

BY: ROBERTO C. MARTINEZ P.E.
R.C.E. NO. 74,475

DATE:

EXPIRATION DATE: 12/31/15

SHEET INDEX

SHT.	NO.	CONTENT:	SHT.	NO.	CONTENT:
T1	1	TITLE SHEET	S1	15	FOUNDATION PLAN (WEST SIDE)
A1	2	SITE PLAN	S2	16	FOUNDATION PLAN (EAST SIDE)
G1	3	GENERAL NOTES	S3	17	FOOTING DETAILS
A2-1	4	DEMOLITION PLAN	S4	18	FRAMING PLAN (WEST SIDE)
A2-2	5	DEMOLITION PLAN	S5	19	FRAMING PLAN (EAST SIDE)
A3	6	DIMENSIONAL PLAN	S6	20	BUILDING SECTIONS
A4	7	ELEVATIONS	S7	21	BUILDING SECTIONS
A5	8	FLOOR PLAN	S8	22	BUILDING SECTIONS
A6	9	ROOF PLAN	S9	23	BUILDING SECTIONS
A7	10	REFLECTIVE CEILING PLAN	E01	24	ELECTRICAL MECHANICAL PLAN
A8	11	DOOR AND WINDOW PLAN	E02	25	POWER PLAN
A9	12	DETAILS	E03	26	LIGHTING PLAN
M1	13	MECHANICAL PLAN	E04	27	EXTERIOR LIGHTING PLAN
P1	14	PLUMBING PLAN			

SHELL BUILDING - PROJECT DATA

BUILDING USE:	PUBLIC LIBRARY
TYPE OF CONSTRUCTION:	V-B
OCCUPANCY GROUP:	A-3 ASSEMBLY
ALLOWABLE AREA:	6,000 S.F.
ACTUAL AREA:	7,250 S.F.
AREA INCREASE:	18,000 S.F. (200%)
NEW ADDITION:	4,874 S.F.
SPRINKLERS:	YES
LOT SIZE:	40,600 S.F.
PERIMETER:	860 FT.
PARKING REQUIRED:	EXIST. 7,250 S.F./190 = 38.15 => 39 STALLS NEW ADDITION: 4,874 S.F./190 = 25.17 => 26 STALLS = 70 STALLS
PARKING PROVIDED:	EXIST. 65 STALLS ADA STALLS = 65/25 = 2.6 => 3 STALLS
STORIES:	1 STORY
ZONING:	GENERAL COMMERCIAL

DEFERED ITEMS

- NEW PARKING /OFF-SITE IMPROVEMENTS/LANDSCAPE

VICINITY MAP

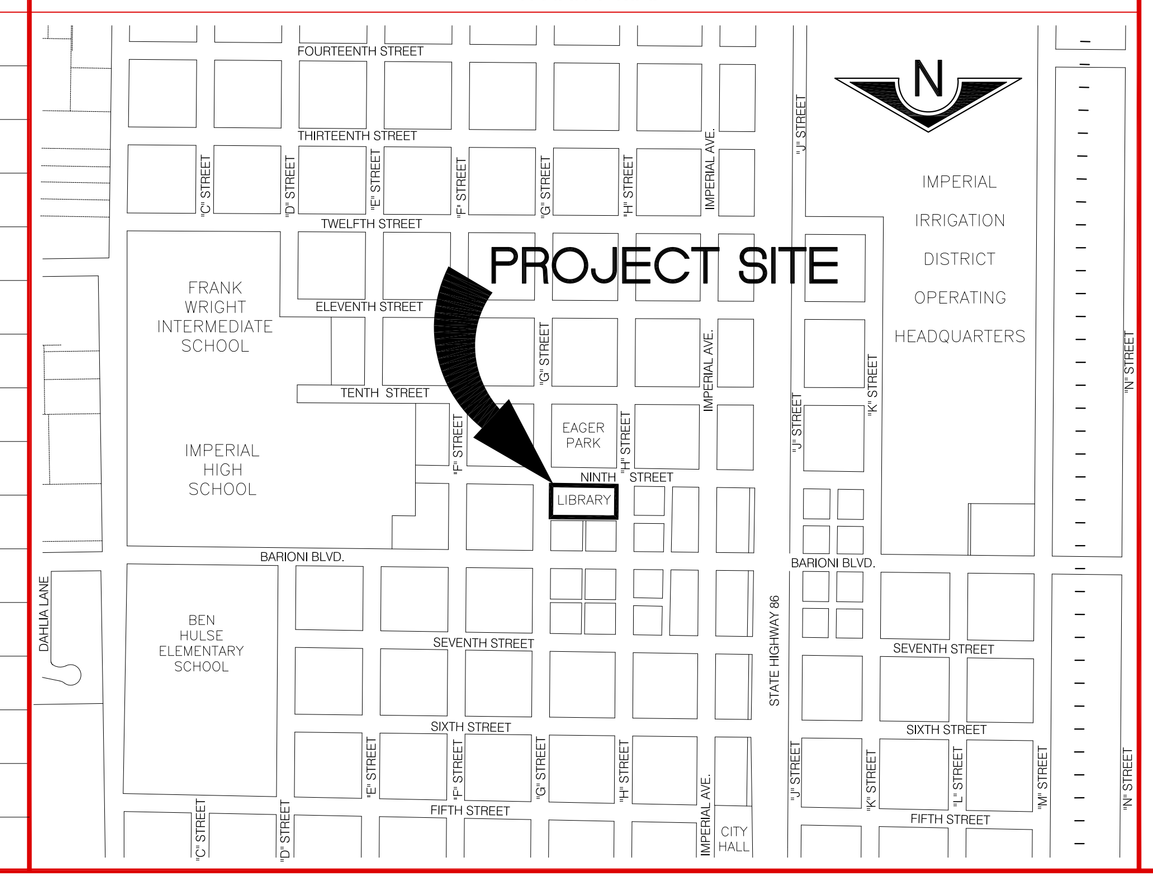

SHEET: 1 OF: 26
DWN. BY: A.A.
REV. BY: O.M.
APP. BY: J.G.

LIBRARY EXPANSION PROJECT

TITLE SHEET

IN THE CITY OF IMPERIAL, CALIFORNIA

DATE: 05/14/15

T1

SEAL:

BY: ROBERTO C. MARTINEZ
653 W. MAIN ST. SUITE 103
EL CENTRO, CA 92243
DATE: 05/14/15
R.C.E. NO. C-74475

REVISIONS

NO.	DESCRIPTION:	DATE:	BY:
△			
△			
△			

City of Imperial California

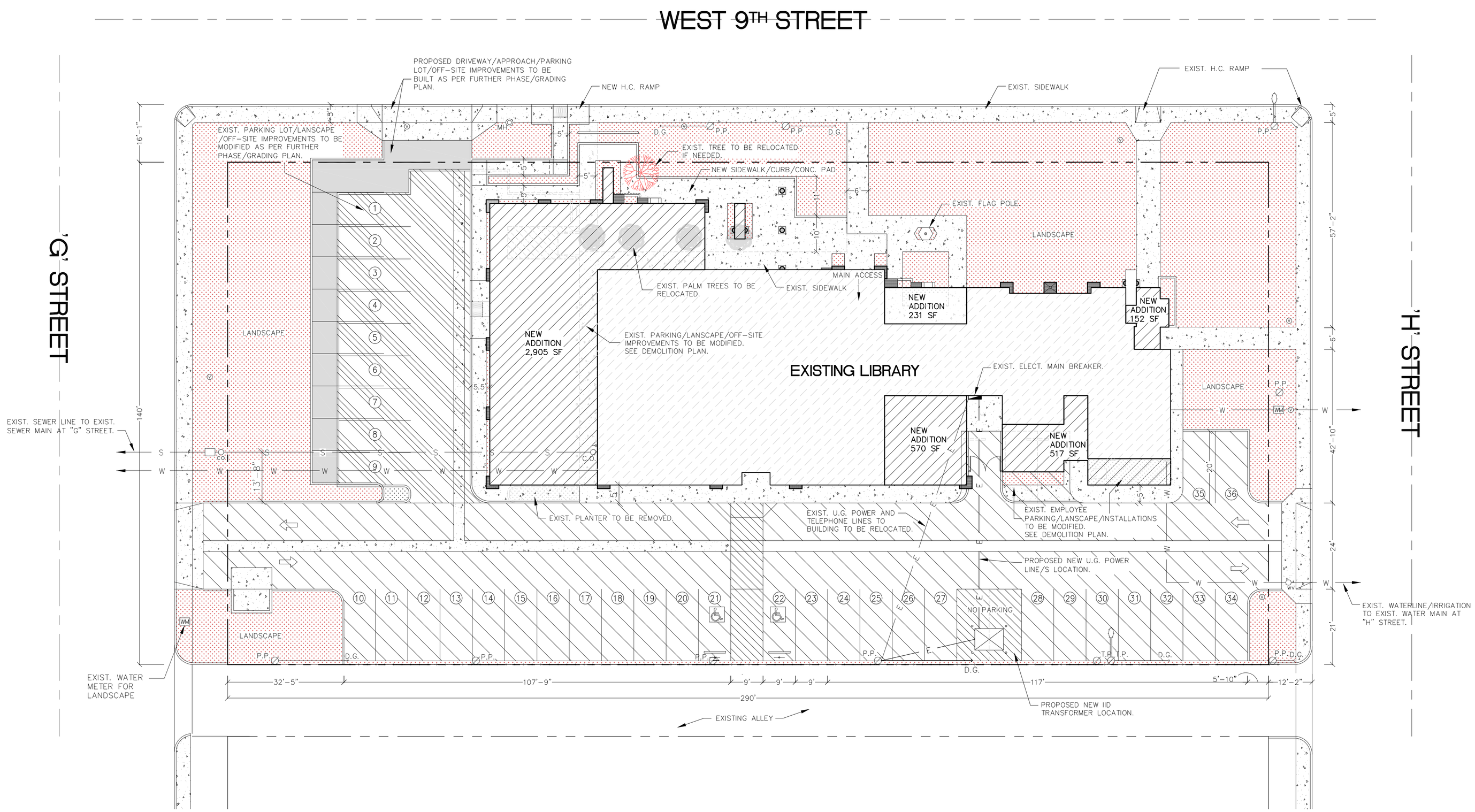

SITE PLAN

SCALE: 1/16" = 1'

LEGEND

SYMBOL	DESCRIPTION	SYMBOL	DESCRIPTION
	NEW ADDITION AREA.		EXISTING OFF-SITE IMPROVEMENTS TO REMAIN
	EXISTING LIBRARY AREA.		NEW OFF-SITE IMPROVEMENTS
	IMPROVEMENTS TO BE MODIFIED/ BUILT AS PER FURTHER PHASE/GRADING PLAN.		EXISTING OFF-SITE IMPROVEMENTS TO BE REMOVED
	NEW SIDEWALK/CONCRETE SURFACE.	— E — E —	EXISTING ELECTRICAL LINE
	EXISTING SIDEWALK/CONCRETE SURFACE.	— E — E —	NEW ELECTRICAL LINE
	NO PARKING/PATH OF TRAVEL AREA.	— S — S —	EXISTING SEWER LINE
	NEW AC PAVEMENT TO BE INSTALLED AS PER FURTHER PHASE/GRADING PLAN.	— W — W —	EXISTING WATERLINE
		∅ P.P.	EXISTING POWER POLE
		∅ T.P.	EXISTING TELEPHONE POLE
		WM	EXISTING WATER METER
		WV	EXISTING WATER VALVE
		⊙	EXISTING CONTROL VALVE
		○ C.O.	EXISTING SEWER CLEAN OUT
		(27)	PARKING SPACE

LANDSCAPE LEGEND

SYMBOL	DESCRIPTION
	LANDSCAPE AREA.
	EXISTING LANDSCAPE AREA TO BE REMOVED.
	EXISTING TREE
	EXISTING PALM TREE

VICINITY MAP

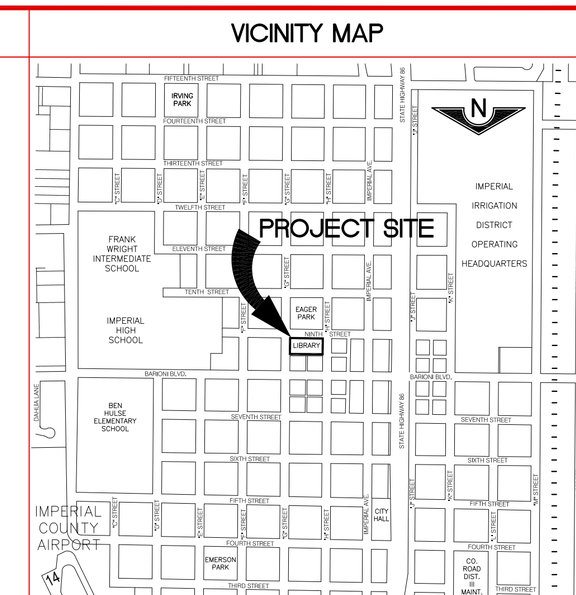

SHEET: 2 OF: 26
DWN. BY: A.A.
REV. BY: O.M.
APP. BY: X.X.

LIBRARY EXPANSION PROJECT

SITE PLAN

IN THE CITY OF IMPERIAL, CALIFORNIA

DATE: 05/14/15

A1

SEAL: REGISTERED PROFESSIONAL ENGINEER ROBERTO C. MARTINEZ No. C-74475 STATE OF CALIFORNIA

BY: ROBERTO C. MARTINEZ
653 W. MAIN ST. SUITE 103
EL CENTRO, CA 92243
DATE: 05/14/15
R.C.E. NO. C-74475

REVISIONS

NO.	DESCRIPTION:	DATE:	BY:
△			
△			
△			

City of Imperial California

ACCESSIBILITY NOTES:

NO HAZARDOUS MATERIALS WILL BE STORED AND/OR USED WITHIN THE BUILDING WHICH EXCEED THE QUANTITIES

THE FOLLOWING DISABLED ACCESS ITEMS ARE TAKEN FROM THE 199 EDITION OF CALIFORNIA ADMINISTRATIVE CODE TITLE 24, ALL PUBLICLY AND PRIVATELY FUNDED PUBLIC ACCOMMODATIONS AND COMMERCIAL FACILITIES SHALL BE ACCESSIBLE TO PERSONS WITH PHYSICAL DISABILITIES AS FOLLOW:

I). ANY BLDG.,STRUCTURE,FACILITY,COMPLEX,OR IMPROVED AREA,OR PORTIONS THEREOF, WHICH ARE USED BY THE GENERAL PUBLIC.

II). ANY SANITARY FACILITIES WHICH ARE MADE AVAILABLE FOR THE PUBLIC,CLIENTS, EMPLOYEES IN SUCH ACCOMMODATION OR FACILITIES.

III). ANY CURB OR SIDEWALK INTENDED FOR PUBLIC USE THAT IS CONSTRUCTED WITH PRIVATE FUNDS.

TO ASSURE THAT BARRIER–FREE DESIGN IS INCORPORATED IN ALL BUILDINGS, FACILITIES,SITE WORKS AND OTHER IMPROVMENTS,THESE STANDARDS TO BE APPLY TO ALL ADDITIONS,ALTERATIONS AND STRUCTURAL REPAIRS.
THESE STANDARDS INCORPORATE THE REQUIREMENTS COVERED IN TITLE II AND III OF THE AMERICAN WITH DISABILITIES ACT OF 1990.

1. THE CONTRACTOR SHALL VERIFY ALL DIMENSION BEFORE STARTING ANY WORK, AND NOTIFY THE ENGINEER IMMEDIATELY OF ANY DISCREPANCIES FOUND.
2. SPECIFIC NOTES AND DETAILS SHALL TAKE PRECEDENCE OVER THESE GENERAL NOTES AND THE TYPICAL DETAILS USED SHALL BE THE SAME AS FOR OTHER SIMILAR WORK.
3. WHERE NO CONSTRUCTION DETAILS ARE SHOWN OR NOTED FOR ANY PART OF THE WORK, THE DETAILS USED SHALL BE THE SAME AS FOR OTHER SIMILAR WORK.
4. THE DESIGN IS BASED ON THE 2010 CALIFORNIA BUILDING CODE WHICH ADOPT THE 2009 IBC,2009 UMC, 2009 UPC AND THE 2009 NEC.
5. NEITHER THE OWNER NOR THE ENGINEER WILL ENFORCE SAFETY MEASURES OR REGULATIONS. THE CONTRACTOR SHALL DESIGN, CONSTRUCT AND MAINTAIN ALL SAFETY DEVICES, INCLUDING SHORING AND BRACING, AND SHALL BE SOLELY RESPONSIBLE FOR CONFORMING TO ALL LOCAL, STATE AND FEDERL SAFETY AND HEALTH STANDARDS, LAWS AND REGULATIONS.
6. ANY DESIRE CHANGE ON THE APPROVED SET OF CONTRACT DRAWINGS MUST BE REQUESTED IN WRITTING TO ENGINEER OR RECORD FOR THEIR REVIEW AND APPROVAL.
7.– PENETRATIONS OF FIRE–RESISTIVE WALLS, FLOOR–CEILING AND ROOF CEILING SHALL BE PROTECTED AS REQUIRED IN CBC SECTION 709 AND 710.
8.– ALL EXITS ARE TO BE OPENABLE FROM INSIDE WITHOUT THE USE OF A KEY OR SPECIAL KNOWLEDGE.
9.– EACH GRADE–LEVEL EXIT DOOR SHALL HAVE A TACTILE EXIT SIGN HAVING THE WORD "EXIT" CBC SEC. 1003.2.8.6.1
10.– WHERE PERMANENT IDENTIFICATION IS PROVIDED FOR ROOMS AND SPACES, RAISED LETTERS SHALL ALSO BE PROVIDED AND ACCOMPANIED BY BRAILLE CBC SECT. 1117B.5
11.– SIGNAGE REQUIREMENTS OF CBC 1117B.5 WILL BE SATISFIED
12.– REGARDLESS OF OCCUPANT LOAD, A FLOOR OR LANDING NOT MORE THAN 1 INCH (1/2–INCH IF DISABELED ACCESS IS REQUIRED) BELOW THE THRESHOLD IS REQUIRED ON EACH SIDE OF AN EXIT DOOR. CBC SECTION 1003.3.1.6.

ENERGY CONSERVATION NOTES:

1). INSUL. MATLS. SHALL MEET CA. QUALITY STD. AS PER SEC. 118 B.E.E.S
2). DOORS & WIND. SHALL MEET MIN. INFILTRATION REQ. PER SEC. 116 BEES
3). ALL PIPING AND DUCTWORK SHALL BE INSULATED CONSISTENT W/THE REQ. OF SEC. 114 B.E.E.S. & TABLE U.M.C.
4). ALL HVAC SYSTEMS SHALL MEET THE CONTROL REQUIREMENTS PER SECTION 115 B.E.E.S.
5). ALL HVAC EQUIPMENT AND APPLIANCES SHALL MEET REQUIREMENTS PER SECTION 115 B.E.E.S.

ELECTRICAL REQUIREMENTS:

1). 15,20,& 30 AMP.RECEPTACLE OUTLETS SHALL BE INSTALLED NOT LESS THAN 12" ABOVE FIN. FLOOR 3–210–50 (e).
2). CENTER OF SWITCHES SHALL BE LOCATED NOT LESS THAN 36" NOT MORE THAN 48" ABOVE THE F.FLOOR 3–380–8(c)

ACOUSTICAL REQUIREMENTS:

1.– REVERBERATION CONTROL:
PRIVATE OFFICES AND CONFERENCE ROOMS USING SUSPENDED ACOUSTICAL CEILINGS SHALL HAVE A NOISE REDUCTION COEFFICIENT (NRC) OF NOT LESS THAN 0.65 IN ACCORDANCE WITH ASTM C–423. OPEN OFFICE USING SUSPENDED ACOUSTICAL CEILINGS SHALL HAVE AN NRC OF NOT LESS THAN 0.75. PRIVATE OFFICES, CONFERENCE ROOMS AND OPEN OFFICES USING ACOUSTICAL CLOUD OR ACOUSTICAL WALL PANELS WITH A MINIMUM OF 70% COVERAGE SHALL HAVE AN NRC OF NOT LESS THAN 0.85.

2.– AMBIENT NOISE CONTROL:
AMBIENT NOISE FROM MECHANICAL EQUIPMENT SHALL NOT EXCEED NOISE CRITERIA CURVE NC–35 IN ACCORDING TO THE ASHRAE HANDBOOK OF FUNDAMENTALS IN OFFICES AND CONFERENCE ROOMS; NC–40 IN CORRIDORS, CAFETERIAS, LOBBIES AND TOILETS; NC–50 IN OTHER SPACES.

3.– NOISE ISOLATION:
ROOMS SEPARATED FROM ADJACENT SPACES BY CEILING–HIGH PARTITIONS (NOT INCLUDING DOORS) SHALL NOT BE LESS THAN THE FOLLOWING NOISE ISOLATION CLASS (NIC) STANDARDS WHEN TESTED IN ACCORDANCE WITH ASTM E–336:
A.– CONFERENCE ROOMS: NIC–40
B.– OFFICES: NIC–35
ALL SURROUNDING WALLS AND DOOR(S) LEADING INTO THE MULTIPURPOSE ROOM (MPR), MUST HAVE A MINIMUM SOUND TRANSMISSION COEFFICIENT (STC) OF 45 OR BETTER.

RECYCLED CONTENT PRODUCTS:

COMPLY TO EXTENT FEASIBLE WITH THE RESOURCE CONSERVATION AND RECOVERY ACT (RCRA), SECTION 6002, 1976. RECYCLED CONTENT PRODUCTS SHALL BE USED AS INDICATED AND DESIGNATED BY THE U.S. ENVIRONTMENTAL PROTECTION AGENCY (EPA) IN THE COMPREHENSIVE PROCUREMENT GUIDELINES (CPG), 40 CPR PART 247, AND ITS ACCOMPANYING RECOVERED MATERIALS ADVISORY NOTICE (RMAN).

ENVIRONTMENTALLY PREFERABLE BUILDING PRODUCTS/MATERIALS:

1.– ENVIRONTMENTALLY PREFERBLE PRODUCTS AND MATERIALS SHALL BE USED AND LIFECYCLE ANALYSIS OF THE PRODUCT SHALL BE COSIDERED.
2.–ENVIRONTMENTALLY PREFERBLE PRODUCTS AND MATERIALS SHALL DO ONE OR MORE OF THE FOLLOWING:
A.– CONTAIN RECYCLED MATERIAL, ARE BIOBASED, ARE RAPIDLY RENEWABLE (10–YEAR OR SHORTER GROWTH CYCLE), OR HAVE POSITIVE ENVIRONMENTAL ATTRIBUTES.
B.– MINIMIZE THE CONSUMPTION OF RESOURCES, ENERGY AND WATER.
C.– PREVENT THE CREATION OF SOLID WASTE, AIR POLLUTION OR WATER POLLUTION.
D.– PROMOTE THE USE OF NON–TOXIC SUBSTANCES AND AVOID TOXIC MATERIALS OR PROCESSES.
E.– ENCOURAGE TO USE PRODUCTS THAT ARE REGIONALLY EXTRACTED AND MANUFACTURED.

WOOD PRODUCTS:

1.– ALL NEW WOOD PRODUCT INSTALLATIONS IS ENCOURAGED TO USE INDEPENENTALY CERTIFIED FOREST PRODUCTS. REFER TO THE FOREST CERTIFICATION RESOURCE CENTER, THE FOREST STEWARDSHIP COUNCIL UNITED STATES OR THE SUSTAINABLE FORESTRY INITIATIVE.
2.– ALL NEW WOOD PRODUCTS SHALL NOT CONTAIN WOOD FROM ENDENGERED WOOD SPECIES, AS LISTED BY THE CONVENTION ON INTERNATIONAL TRADE IN ENDENGERED SPECIES.

GENERAL BIDDING NOTES

GENERAL CONTRACTOR SHALL PROVIDE THE FOLLOWING DOCUMENTS FOR REVIEW AND APPROVAL TO LOCAL BUILDING AUTHORITY AND SECURE PERMITS IF REQUIRED.

1.– THE FIRE SPRINKLER DRAWINGS AS TO COMPLY WITH CURRENT APPLICABLE CODES.

QUALITY ASSURANCE

1.– INSTALL AND ASSEMBLIES ALL MATERIALS SHOW ON THESE PLANS AS TO COMPLY WITH ALL APPLICABLE CODES & STANDARDS AND WITH REQUIREMENTS OF LOCAL AGENCIES HSUING JURISDICTION.

SPACE ALLOWANCES N.T.S.

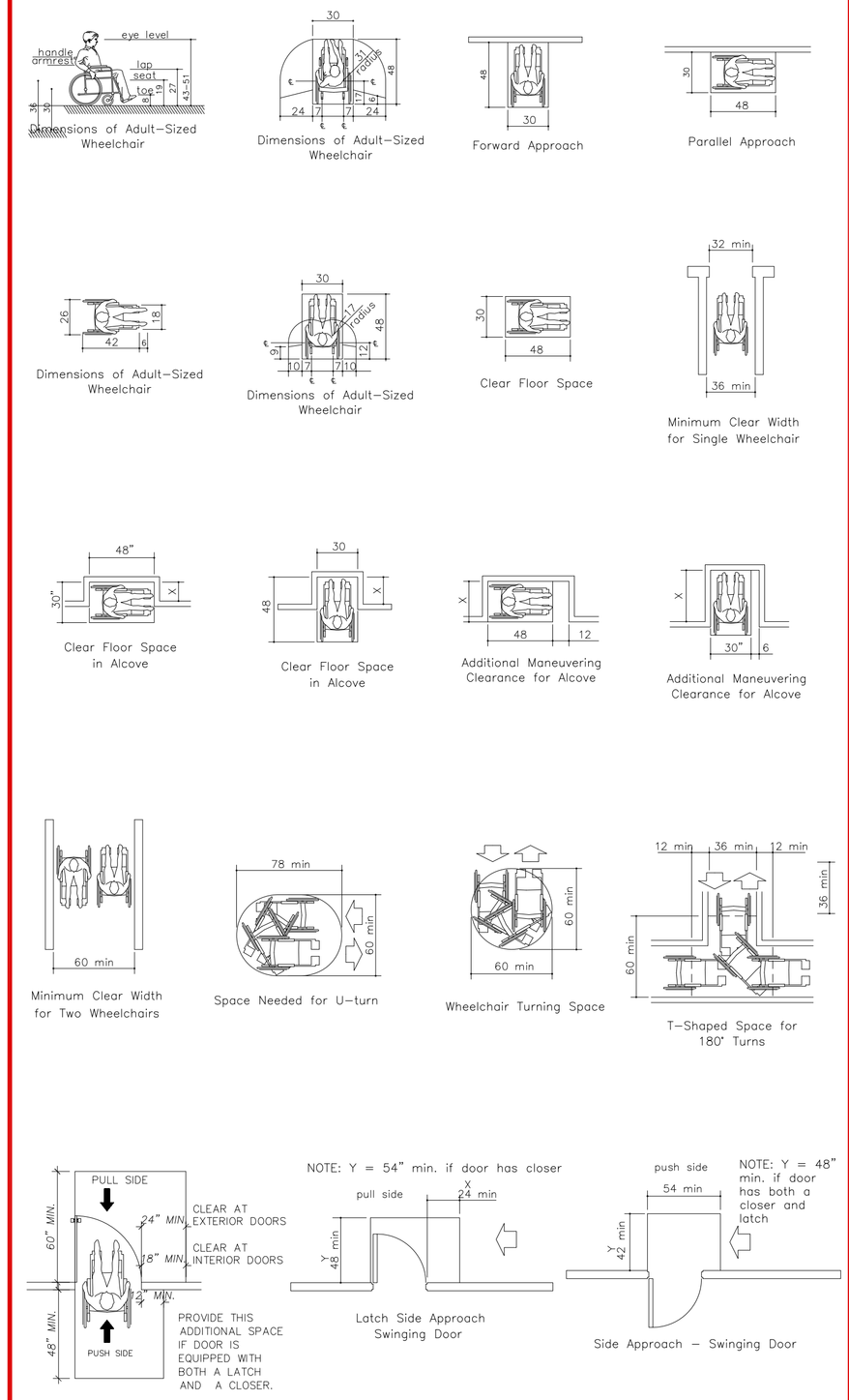

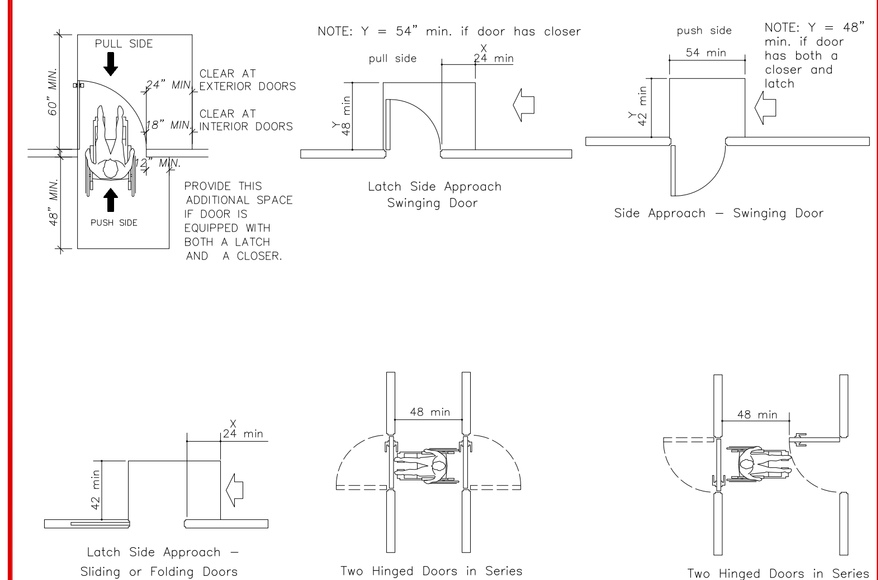

ACCESSIBLE ROUTE

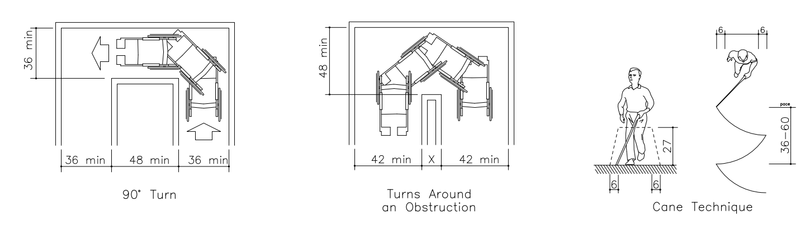

ACCESSIBILITY NOTES (CONT):

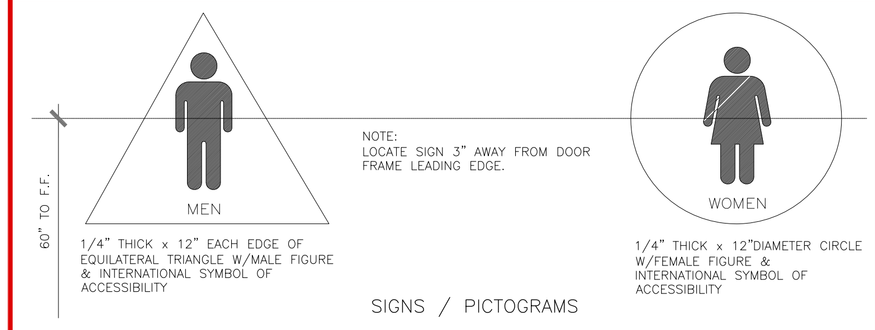

SIGNS / PICTOGRAMS

LETTERS & NUMBERS:
1. WIDTH TO HEIGHT RATIO BETWEEN 3:5 AND 1:1.
2. STROKE WIDTH TO HEIGHT BETWEEN 1:5 AND 1:10
3. CONTRAST CHARACTERS & SYMBOLS W/BACKGROUND.

SIGNS / PICTOGRAMS
5. PICTOGRAMS/PICTORIAL SYMBOL SIGNS SHALL BE ACCOMPAINED BY THE EQUIVALENT VERBAL DESCRIPTION PLACED DIRECTLY BELOW THE PICTOGRAM THE BORDER DIMENSION SHALL BE 6" MIN. HEIGHT.
6. CHARACTERS & BACKGROUNDS SHALL BE OF–NON–GLARE CONTRASTING COLORS.
7. SIGNS/PICTOGRAMS SHALL BE INTALLED ON THE WALL ADJACENT TO DOOR LEADING TO THE ROOMOR SPACE THEY DESCRIBE AND @60" AFF TO SIGN CENTERLINE & WHERE A PERSON MAY APPROACH WITHIN 3" OF SIGNAGE W/OUT ENCOUNTERING PROTRUDING OBJECTS OR STANDING W/IN THE DOOR SWING AREA.
8. VERTICAL CLEARANCE @ SUSPENDED SIGNS W/MIN. HEADROOM OF 80" REQUIRE MIN. 3" CHARACTER HEIGHT MEASURED BY USING UPPERCASE "X" CHARACTERS & NUMBERS SHALL BE SIZED ACCORDING TO VIEWING DISTANCE FROM WICH READ. LOWER CASE CHARACTERS PERMITTED.

SIGN LOCATIONS:
9. ALL ACCESSIBLE ENTRANCES IDENTIFIED WITH MINIMUM OF ONE STANDARD SIGN.
10. ADDITIONAL DIRECTIONAL SIGNS ALONG ACCESSIBLE PATH OF TRAVEL ARE REQUIRED.
11. BUILDINGS REMODELED TO PROVIDE ACCESSIBLE SANITARY FACILITIES FOR PUBLIC USE SHALL HAVE INFORMATION POSTED IN THE LOBBY AS PART OF THE BUILDING DIRECTORY.

INTERNATIONAL SYMBOL OFF ACCESSIBILITY:
12. STANDARD USED TO IDENTIFY ACCESIBLE FACILITIES.
13. WHITE FIGURE ON BLUE BACKGROUND, COLOR #15090 ON FEDERAL STANDARD #595A.
14. WHEN ENFORCING AGENCY DETERMINES, IF APPROPIATE, SPECIAL DESIGNS AND COLORS MAY BE APPROVED.

BRAILLE:
15. USE CONTRASTED GRADE 2 BRAILLE DOTS TO BE .01 INCH ON CENTER IN EACH CELL.
16. .02 INCH SPACE BETWEEN CELLS.
17. DOTS RAISED MIN. .0025 INCH ABOVE BACKGROUND.

SINGLE ACCOMODATION TOILET

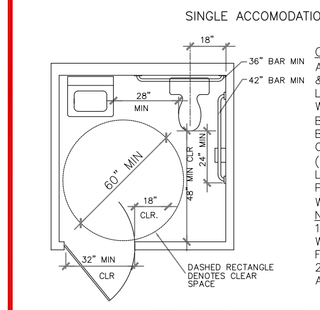

CLEARANCE NOTES:
A. 28" CLR. BETWEEN LAVATORY & EDGE OF WATER CLOSET TANK LID WHEN TANK WATER CLOSET OCCURS.
B. 28" MIN. CLR. TO EDGE OF BOWL WHEN FLUSH VALVE WATER CLOSET OCCURS (28" MIN. CLEAR BETWEEN LAVATORY TO FURTHEST PROTUDING EDGE OF WATER CLOSET, TYPICAL).

NOTES:
1. PROVIDE PRIVACY DOOR LOCK WHEN IT IS A PRIVATE TOILET OR FOR UNISEX USE.
2. GRAB BARS, SEE TYPICAL ACCESIBILITY NOTES SHEET.

GRAB BAR DETAIL

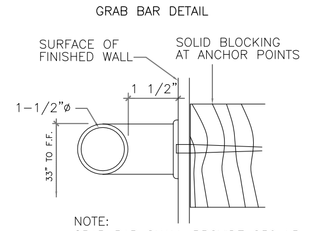

NOTE:
GRAB BAR SHALL PROVIDE 250 LB. PER LINEAR FT. SUPPORT

TYPICAL TOILET ELEVATIONS

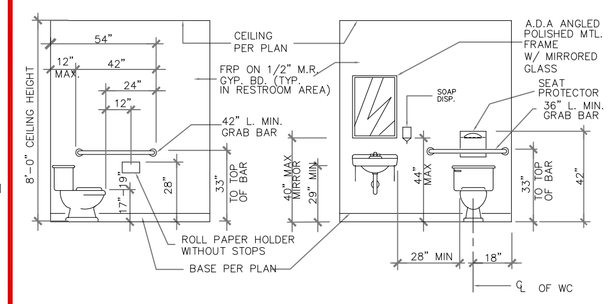

Operable parts must be 40" height for at least 1:
i) Paper towel dispenser; sanitary napkin dispenser.
ii) Waste paper disposal; other similar dispensing and/or disposal fixtures.
The bottom edge of mirrors must be 40" height.

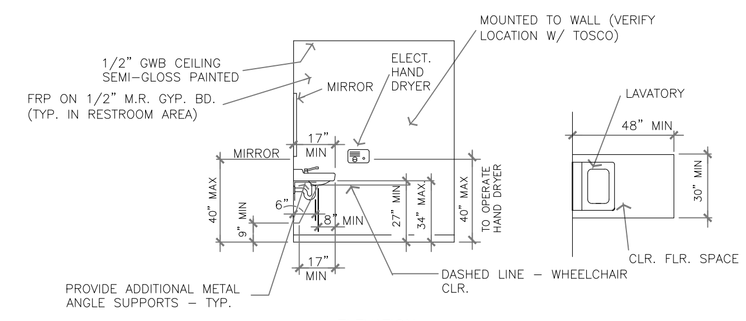

ELEVATION PLAN

TYPICAL LAVATORY

SANITARY FACILITIES:

The doorways leading to sanitary facilities shall be identified, per Section 1115b.5, as follows:
a) an equilateral triangle 1/4" thick with edges 12" long and a vortex pointing upward at men's rest rooms.
b) A circle 1/4" thick, 12" in diameter at women's rest rooms.
c) A 12" diameter circle with a triangle superimposed on the circle and within the 12"diameter at unisex restrooms.
d) The required symbols shall be centered on the door at height of 60".
e) Braile signage shall also be located on the wall adjacent to the latch outside of the doorways leading to the sanitary facilities, per Section 1117B.5.9.

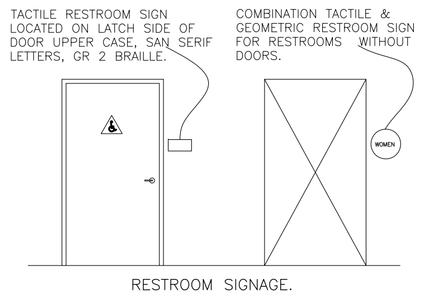

RESTROOM SIGNAGE.

SHEET: 3
OF: 26
DWN. BY: A.A.
REV. BY: O.M.
APP. BY: J.G.

LIBRARY EXPANSION PROJECT

TITLE SHEET

IN THE CITY OF IMPERIAL, CALIFORNIA

DATE: 05/14/15

G1

SEAL:

REVISIONS

NO.	DESCRIPTION:	DATE:	BY:
△			
△			
△			

BY: ROBERTO C. MARTINEZ
653 W. MAIN ST. SUITE 103
EL CENTRO, CA 92243
DATE: 05/14/15
R.C.E. NO. C–74475

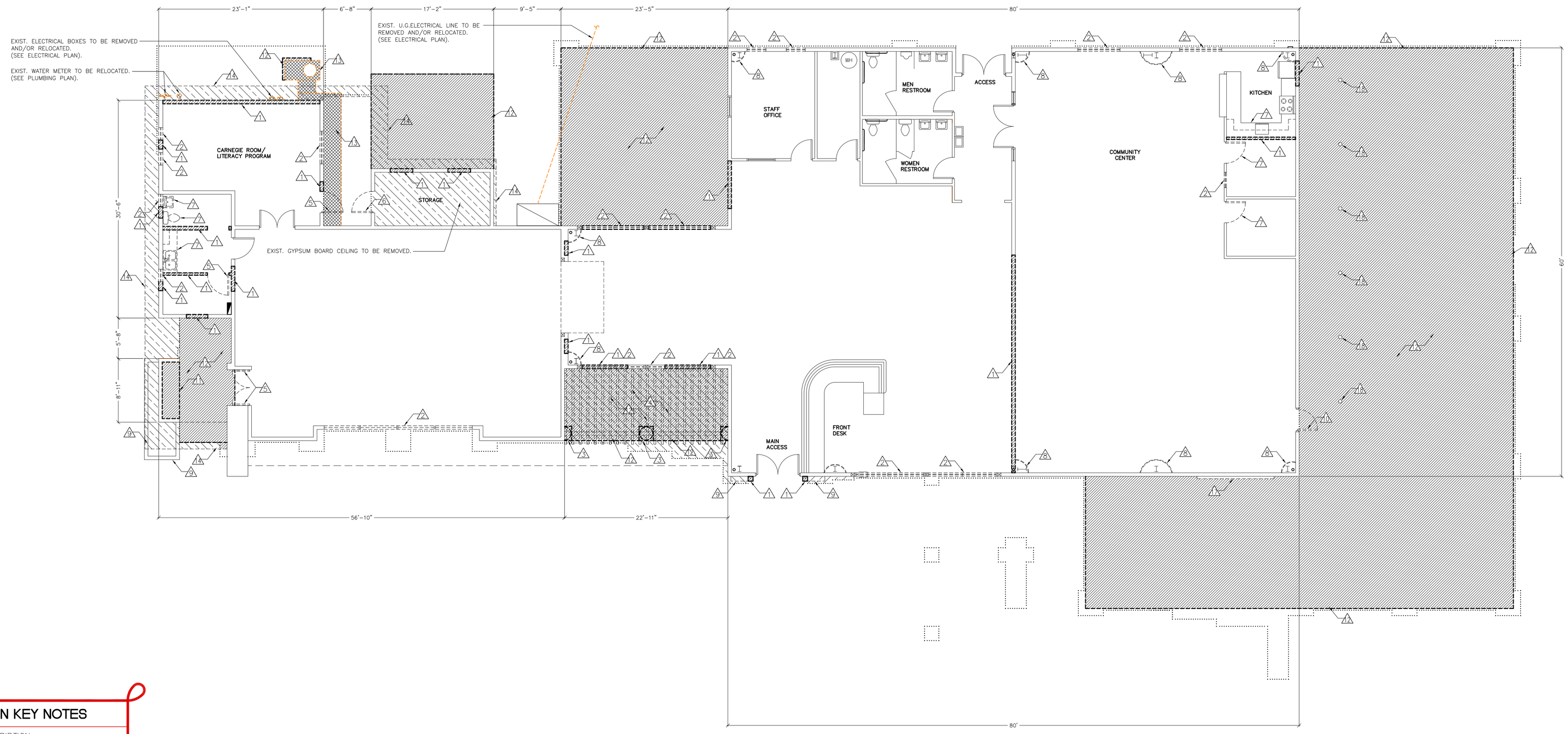

DEMOLITION KEY NOTES

NO.	DESCRIPTION
1	SAWCUT, REMOVE AND DISPOSE EXISTING WALL AS SHOWN ON PLAN.
2	SAWCUT, REMOVE AND DISPOSE EXISTING WINDOW AND METAL FRAME AS SHOWN ON PLAN.
3	REMOVE AND STORE EXISTING COLUMN FOR REUSE.
4	REMOVE AND STORE EXISTING PATIO STRUCTURE/TRELLIS.
5	REMOVE AND DISPOSE EXISTING DOOR AND FRAME.
6	REINSTALL EXIST DOOR TO SWING REVERSE AS PER FLOOR PLAN.
7	REMOVE AND DISPOSE EXISTING CABINET/COUNTER, FURNITURE SYSTEM AND/OR FIXTURES, ETC. AS SHOWN ON PLAN.
8	REMOVE AND DISPOSE COLUMN COVER AS SHOWN ON PLAN.
9	REMOVE EXISTING ROCK VENEER AS SHOWN ON PLAN.
10	REMOVE AND STORE EXISTING DOOR AND FRAME TO BE REUSED AT NEW ADDITION (COMMUNITY LOUNGE AREA).
11	SAWCUT, REMOVE AND DISPOSE EXISTING WALL AND/OR STRUCTURE AS TO INCREASE INTERNAL SPACE FOR NEW OFFICE AND COMPLETE EXISTING WALL AS SHOWN ON PLAN.
12	SAWCUT, REMOVE AND DISPOSE EXISTING AC AND/OR PCC ELEMENTS AS SHOWN ON PLAN.
13	REMOVE AND STORE EXISTING AC UNIT AND DUCT SYSTEM AS SHOWN ON PLAN.
14	SAWCUT, REMOVE AND DISPOSE EXISTING WOOD OVERHANG AS SHOWN ON PLAN.
15	REMOVE AND DISPOSE EXISTING WOOD TRIM AS SHOWN ON PLAN.
16	REMOVE AND DISPOSE EXISTING FOAM TRIM AS SHOWN ON PLAN.
17	REMOVE AND STORE EXISTING LETTER SIGN.
18	REMOVE AND STORE EXISTING BOLLARDS.

DEMOLITION LEGEND

	SAWCUT, DEMOLISH, REMOVE AND DISPOSE EXISTING MASONRY OR WOOD WALLS; ASPHALT PADS AND/OR CONCRETE ELEMENTS AS NOTED.
	SAWCUT, REMOVE AND DISPOSE EXISTING WOOD OVERHANG, PATIO/TRELLIS, CEILING AS NOTED/SHOWN.
	REMOVE, STORE AND/OR DISPOSE MECHANICAL, PLUMBING AND ELECTRICAL DEVICES/SYSTEMS AS NOTED/SHOWN. (SEE MECHANICAL, PLUMBING AND ELECTRICAL PLAN.
	SAWCUT, REMOVE AND DISPOSE EXISTING WINDOWS, DOORS, FRAMES AND/OR FURNITURE AS SHOWN ON PLAN.
	NEW ADDITION AREA LIMIT.

DEMOLITION PLAN

LOWER LEVEL

SCALE: 1/8" = 1'

SHEET: 4 OF: 26

DWN. BY: A.A.
REV. BY: O.M.
APP. BY: J.G.

LIBRARY EXPANSION PROJECT

DEMOLITION PLAN

IN THE CITY OF IMPERIAL, CALIFORNIA

DATE: 05/14/15

A2-1

SEAL: REGISTERED PROFESSIONAL ENGINEER ROBERTO C. MARTINEZ No. C-74475 STATE OF CALIFORNIA CIVIL

BY: ROBERTO C. MARTINEZ
653 W. MAIN ST. SUITE 103
EL CENTRO, CA 92243
DATE: 05/14/15
R.C.E. NO. C-74475

REVISIONS

NO.	DESCRIPTION:	DATE:	BY:
△			
△			
△			

City of Imperial California

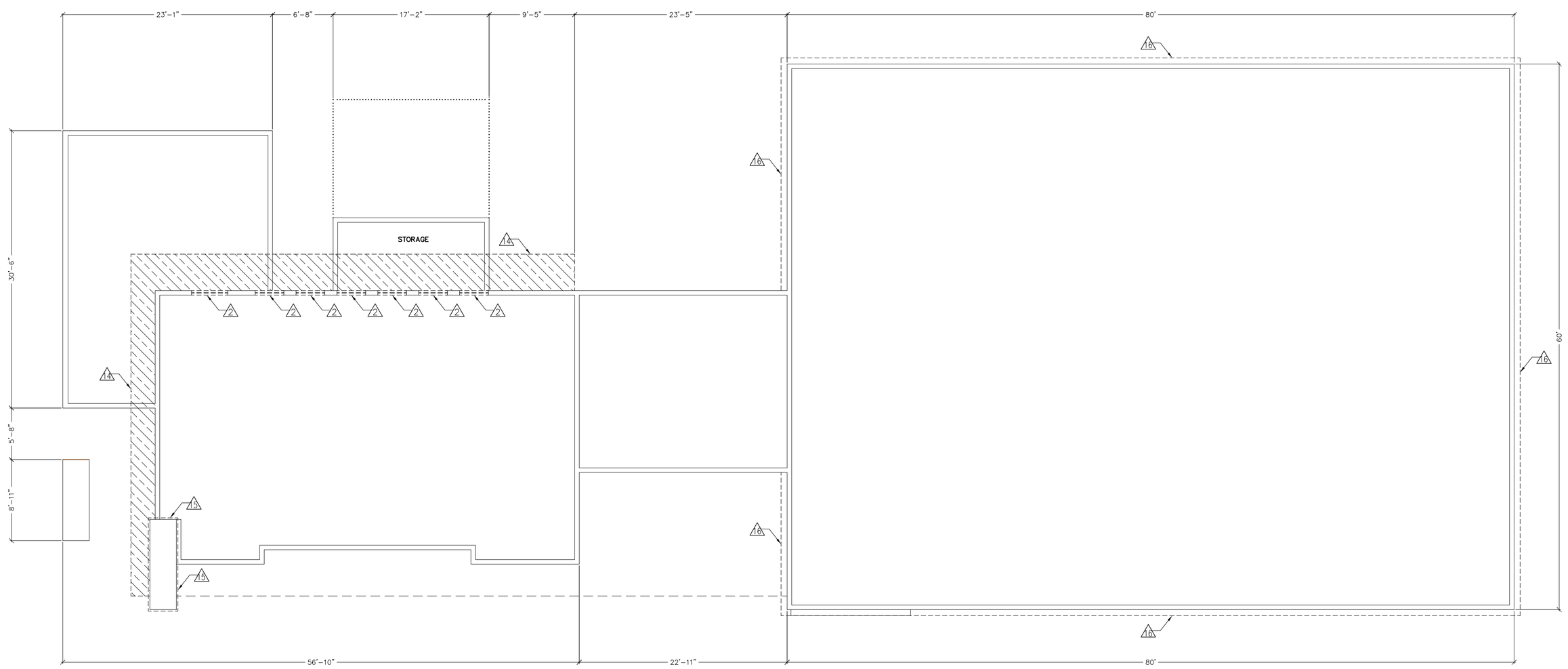

DEMOLITION KEY NOTES

NO.	DESCRIPTION
1	SAWCUT, REMOVE AND DISPOSE EXISTING WALL AS SHOWN ON PLAN.
2	SAWCUT, REMOVE AND DISPOSE EXISTING WINDOW AND METAL FRAME AS SHOWN ON PLAN.
3	REMOVE AND STORE EXISTING COLUMN FOR REUSE.
4	REMOVE AND STORE EXISTING PATIO STRUCTURE/TRELLIS.
5	REMOVE AND DISPOSE EXISTING DOOR AND FRAME.
6	REINSTALL EXIST DOOR TO SWING REVERSE AS PER FLOOR PLAN.
7	REMOVE AND DISPOSE EXISTING CABINET/COUNTER, FURNITURE SYSTEM AND/OR FIXTURES, ETC. AS SHOWN ON PLAN.
8	REMOVE AND DISPOSE COLUMN COVER AS SHOWN ON PLAN.
9	REMOVE EXISTING ROCK VENEER AS SHOWN ON PLAN.
10	REMOVE AND STORE EXISTING DOOR AND FRAME TO BE REUSED AT NEW ADDITION (COMMUNITY LOUNGE AREA).
11	SAWCUT, REMOVE AND DISPOSE EXISTING WALL AND/OR STRUCTURE AS TO INCREASE INTERNAL SPACE FOR NEW OFFICE AND COMPLETE EXISTING WALL AS SHOWN ON PLAN.
12	SAWCUT, REMOVE AND DISPOSE EXISTING AC AND/OR PCC ELEMENTS AS SHOWN ON PLAN.
13	REMOVE AND STORE EXISTING AC UNIT AND DUCT SYSTEM AS SHOWN ON PLAN.
14	SAWCUT, REMOVE AND DISPOSE EXISTING WOOD OVERHANG AS SHOWN ON PLAN.
15	REMOVE AND DISPOSE EXISTING WOOD TRIM AS SHOWN ON PLAN.
16	REMOVE AND DISPOSE EXISTING FOAM TRIM AS SHOWN ON PLAN.
17	REMOVE AND STORE EXISTING LETTER SIGN.
18	REMOVE AND STORE EXISTING BOLLARDS.

DEMOLITION LEGEND

	SAWCUT, DEMOLISH, REMOVE AND DISPOSE EXISTING MASONRY OR WOOD WALLS; ASPHALT PADS AND/OR CONCRETE ELEMENTS AS NOTED.
	SAWCUT, REMOVE AND DISPOSE EXISTING WOOD OVERHANG, PATIO/TRELLIS AS NOTED/SHOWN.
	REMOVE, STORE AND/OR DISPOSE MECHANICAL, PLUMBING AND ELECTRICAL DEVICES/SYSTEMS AS NOTED/SHOWN. (SEE MECHANICAL, PLUMBING AND ELECTRICAL PLAN.
	SAWCUT, REMOVE AND DISPOSE EXISTING WINDOWS, DOORS, FRAMES AND/OR FURNITURE AS SHOWN ON PLAN.
	NEW ADDITION AREA LIMIT.

DEMOLITION PLAN

UPPER LEVEL

SCALE: 1/8" = 1'

SHEET: 5 OF: 26

DWN. BY: A.A.
REV. BY: O.M.
APP. BY: J.G.

LIBRARY EXPANSION PROJECT

DEMOLITION PLAN

IN THE CITY OF IMPERIAL, CALIFORNIA

DATE: 05/14/15

A2-2

SEAL: REGISTERED PROFESSIONAL ENGINEER ROBERTO C. MARTINEZ No. C-74475 STATE OF CALIFORNIA CIVIL

BY: ROBERTO C. MARTINEZ
653 W. MAIN ST. SUITE 103
EL CENTRO, CA 92243
DATE: 05/14/15
R.C.E. NO. C-74475

REVISIONS

NO.	DESCRIPTION:	DATE:	BY:
△			
△			
△			

City of Imperial California

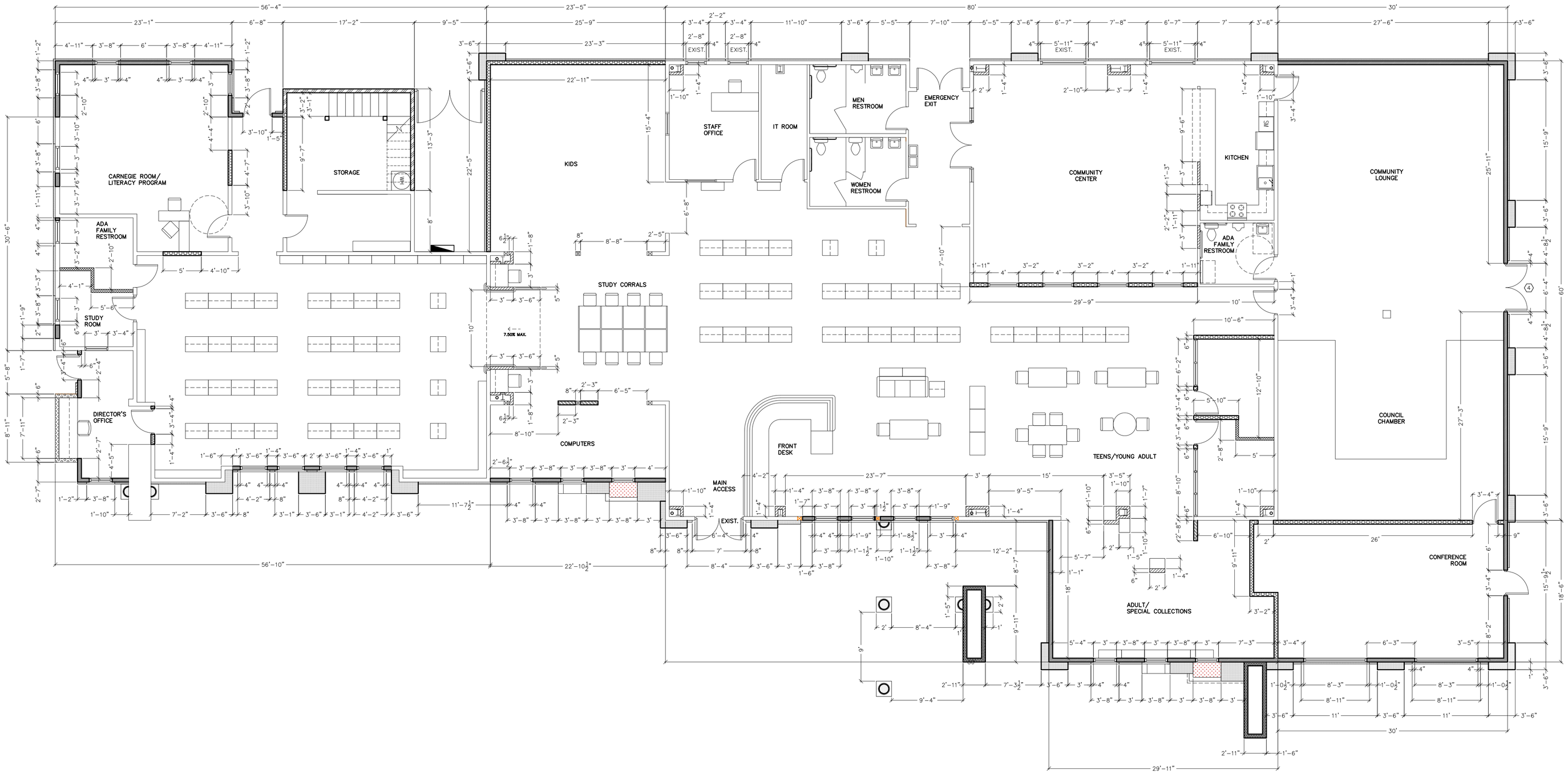

DIMENSIONAL PLAN
LOWER LEVEL

SCALE: 1/8" = 1'

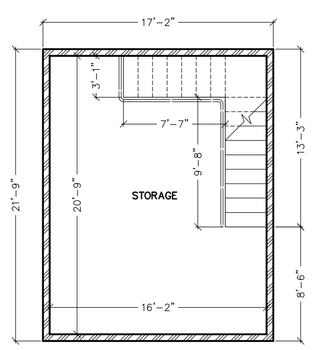

DIMENSIONAL PLAN
UPPER LEVEL

SCALE: 1/8" = 1'

SHEET: 6
OF: 26

DWN. BY: A.A.
REV. BY: O.M.
APP. BY: J.G.

LIBRARY EXPANSION PROJECT
DIMENSIONAL PLAN
IN THE CITY OF IMPERIAL, CALIFORNIA

DATE: 05/14/15

A3

SEAL:

BY: ROBERTO C. MARTINEZ
653 W. MAIN ST. SUITE 103
EL CENTRO, CA 92243
DATE: 05/14/15
R.C.E. NO. C-74475

REVISIONS

NO.	DESCRIPTION:	DATE:	BY:
△			
△			
△			

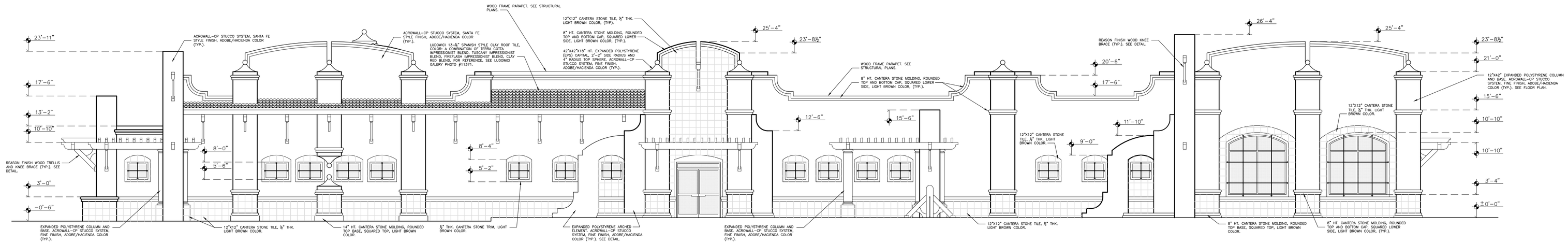

NORTH ELEVATION
NOT TO SCALE

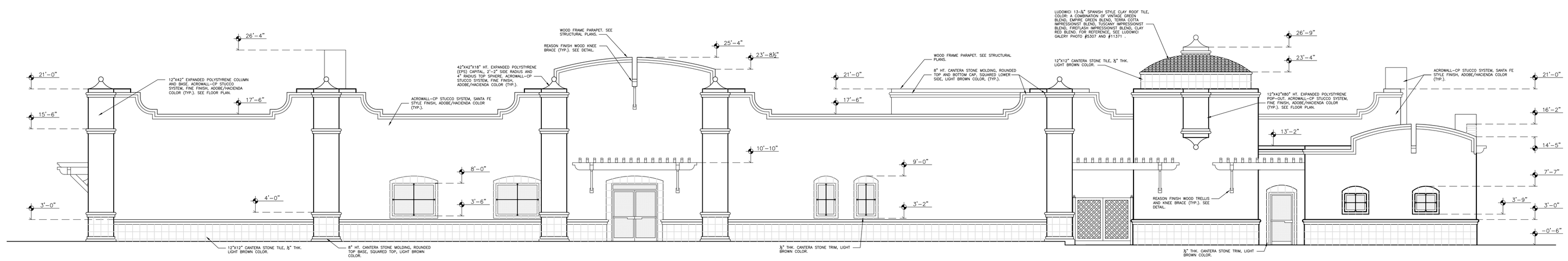

SOUTH ELEVATION
NOT TO SCALE

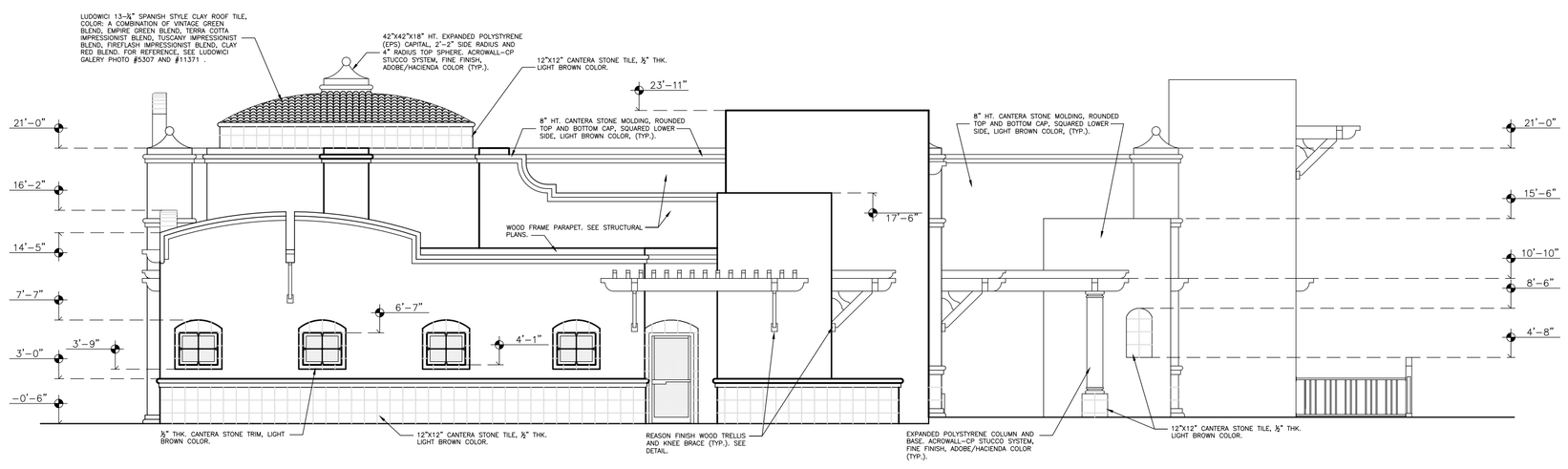

EAST ELEVATION
NOT TO SCALE

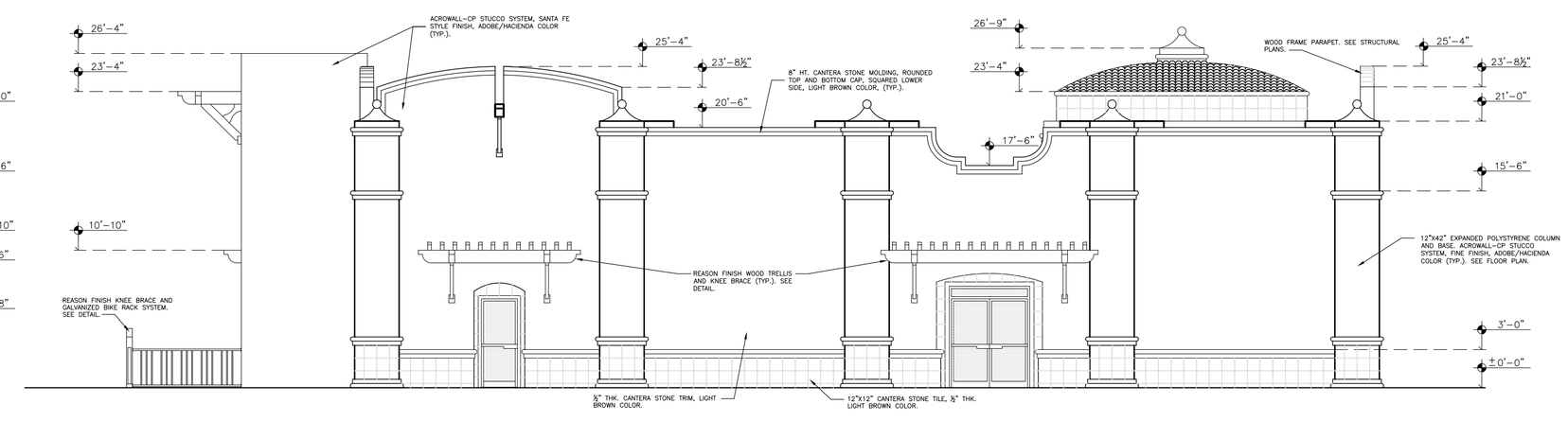

WEST ELEVATION
NOT TO SCALE

ELEVATIONS

SCALE: 1/8" = 1'

SHEET: 1 OF: 1
DWN. BY: A.A.
REV. BY: O.M.
APP. BY: J.G.

LIBRARY EXPANSION PROJECT
ELEVATIONS
IN THE CITY OF IMPERIAL, CALIFORNIA
DATE: 05/14/15

A4

SEAL: PROFESSIONAL ENGINEER REGISTERED No. C-74475 CIVIL STATE OF CALIFORNIA

BY: ROBERTO C. MARTINEZ
653 W. MAIN ST. SUITE 103
EL CENTRO, CA 92243
DATE: 05/14/15
R.C.E. NO. C-74475

REVISIONS

NO.	DESCRIPTION:	DATE:	BY:
△			
△			
△			

City of Imperial California

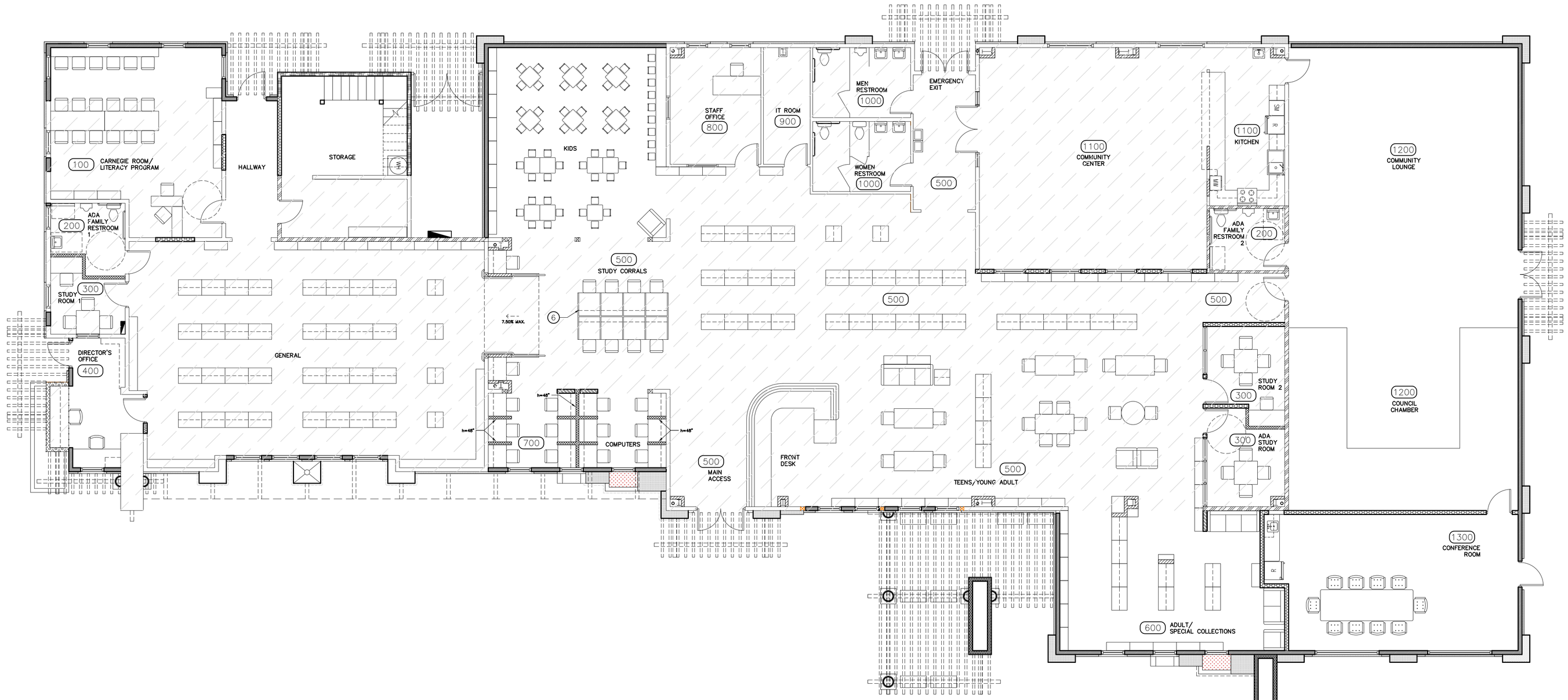

FLOOR PLAN
LOWER LEVEL

SCALE: 1/8" = 1'

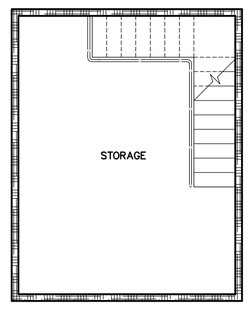

FLOOR PLAN
UPPER LEVEL

SCALE: 1/8" = 1'

WALL LEGEND

SYMBOL	DESCRIPTION
	NEW 2x6 WOOD FRAMING WALL @ 16" O.C W/5/8" ONE SIDE, R-19 RECYCLED COTTON SOUND PROOF INSULATION. PROVIDE TEXTURE/FINISH AS TO MATCH W/EXISTING WALLS (INTERIOR) AND EXPANDED POLYSTYRENE (EPS) INSULATION + ACROWALL-CP STUCCO SYSTEM, SANTA FE STYLE FINISH (EXTERIOR).
	NEW 2x6 WOOD FRAMING WALL @ 16" O.C W/5/8" DRYWALL ONE SIDE (INTERIOR), R-19 RECYCLED COTTON SOUND PROOF INSULATION AND ACROWALL-CP STUCCO SYSTEM, SANTA FE STYLE FINISH (EXTERIOR)
	EXIST. WOOD FRAMING WALL. REMOVE AND REPLACE ONE SIDE ONLY, PROVIDE 5/8" DRYWALL AND INSTALL R-19 RECYCLED COTTON SOUND PROOF INSULATION + TEXTURE/FINISH TO MATCH W/EXISTING CONTIGUOUS WALLS.
	NEW 2x6 WOOD FRAMIMG WALL (PARTITION WALL) @ 16" O.C W/5/8" DRYWALL EACH SIDE. EXTEND WALL 6" BEYOND TOP OF SUSPENDED CEILING HEIGHT. + TEXTURE/FINISH TO MATCH W/EXISTING CONTIGUOUS WALLS.
	NEW 2x6 WOOD FRAMIMG WALL (PARTITION WALL) @ 16" O.C W/5/8" DRYWALL EACH SIDE, R-19 RECYCLED COTTON SOUND PROOF INSULATION. EXTEND WALL 6" BEYOND TOP OF SUSPENDED CEILING HEIGHT.
	2x6 WOOD FRAMING WALL @ 16" O.C W/ 15/32" PLYWOOD SHEATHING + ACROWALL-CP STUCCO SYSTEM, SANTA FE STYLE FINISH AT ONE SIDE ONLY (EXTERIOR).
	NEW 2x4 WOOD FRAMING WALL (PARTITION WALL) @ 16" O.C W/5/8" DRYWALL EA. SIDE, R-19 RECYCLED COTTON SOUND PROOF INSULATION. EXTEND WALL 6" BEYOND TOP OF SUSPENDED CEILING HEIGHT WHEN NOT NOTED OTHERWISE, TEXTURE/FINISH TO MATCH W/EXISTING CONTIGUOUS WALLS.
	NEW 2x4 WOOD FRAMING WALL (PARTITION WALL) @ 16" O.C W/5/8" DRYWALL EA. EXTEND 6" BEYOND TOP OF SUSPENDED CEILING HEIGHT, TEXTURE/FINISH TO MATCH W/EXISTING CONTIGUOUS WALLS.
	3" EXPANDED POLYSTYRENE (EPS) INSULATION.
	EXISTING WOOD WALL TO REMAIN.
	EXISTING CONSTRUCTION

LEGEND

SYMBOL	DESCRIPTION	SYMBOL	DESCRIPTION
	BOOK SHELVE ISLAND		WOODEN CUSTOM STUDY CORRALS
	STD. BOOK SHELVE		CUSTOM COMPUTER CORRALS
	84"X30" TABLE		CUSTOM DESK AND WALL SHELVE
	36"X36" TABLE		UPPER/LOWER CABINET SYSTEM
	144"X48" TABLE (CONFERENCE ROOM)	R	EXISTING REFRIGERATOR
	KIDS TABLE	MW	MICROWAVE OVEN
	FILE CABINET	SM	SODA MACHINE
	FILE CABINET		
	STD. CHAIR		
	OFFICE CHAIR		
	EXECUTIVE CHAIR		
	EXISTING STOVE		

FINISH SCHEDULE

NO.	ROOM	CEILING HEIGHT	WALL PAINT TYPE	REMARKS	NO.	ROOM	CEILING HEIGHT	WALL PAINT TYPE	REMARKS
100	CARNEGIE ROOM / LITERACY PROGRAM	EXIST.	SPACKLED AND PRIME PAINTED W/LOW VOC PRIMER. HIGH PERFORMANCE EGGSHELL FRAZEE PAINT WALL COVERING. COLOR: JONESBORO CLC1219W. EUROTILE COMMERCIAL CARPET TILE, MODEL #707102, COLOR: WINDSOR TERRACE AGATE, DIMS. 19.7"X19.7" OR APPROVED EQUAL.		800	STAFF OFFICE	EXIST.	SPACKLED AND PRIME PAINTED W/LOW VOC PRIMER. HIGH PERFORMANCE EGGSHELL FRAZEE PAINT WALL COVERING. COLOR: JONESBORO CLC1219W. EUROTILE COMMERCIAL CARPET TILE, MODEL #707102, COLOR: WINDSOR TERRACE AGATE, DIMS. 19.7"X19.7" OR APPROVED EQUAL.	
200	ADA FAMILY RESTROOM 1 AND 2	9'-0"	SPACKLED AND PRIME PAINTED W/LOW VOC PRIMER. HIGH PERFORMANCE EGGSHELL FRAZEE PAINT WALL COVERING. COLOR: JONESBORO CLC1219W. EUROTILE COMMERCIAL CARPET TILE, MODEL #707102, COLOR: WINDSOR TERRACE AGATE, DIMS. 19.7"X19.7" OR APPROVED EQUAL.		900	I.T. ROOM	EXIST.	SPACKLED AND PRIME PAINTED W/LOW VOC PRIMER. HIGH PERFORMANCE EGGSHELL FRAZEE PAINT WALL COVERING. COLOR: JONESBORO CLC1219W. EUROTILE COMMERCIAL CARPET TILE, MODEL #707102, COLOR: WINDSOR TERRACE AGATE, DIMS. 19.7"X19.7" OR APPROVED EQUAL.	
300	STUDY ROOM 1 AND 2, ADA STUDY ROOM	9'-0"	SPACKLED AND PRIME PAINTED W/LOW VOC PRIMER. HIGH PERFORMANCE EGGSHELL FRAZEE PAINT WALL COVERING. COLOR: JONESBORO CLC1219W. EUROTILE COMMERCIAL CARPET TILE, MODEL #707102, COLOR: WINDSOR TERRACE AGATE, DIMS. 19.7"X19.7" OR APPROVED EQUAL.		1000	MEN'S, WOMEN'S RESTROOMS	EXIST.	SPACKLED AND PRIME PAINTED W/LOW VOC PRIMER. HIGH PERFORMANCE EGGSHELL FRAZEE PAINT WALL COVERING. COLOR: JONESBORO CLC1219W. EUROTILE COMMERCIAL CARPET TILE, MODEL #707102, COLOR: WINDSOR TERRACE AGATE, DIMS. 19.7"X19.7" OR APPROVED EQUAL.	
400	DIRECTOR'S OFFICE	9'-0"	SPACKLED AND PRIME PAINTED W/LOW VOC PRIMER. HIGH PERFORMANCE EGGSHELL FRAZEE PAINT WALL COVERING. COLOR: MORETI CLC1214M. EUROTILE COMMERCIAL CARPET TILE, MODEL #707102, COLOR: WINDSOR TERRACE AGATE, DIMS. 19.7"X19.7" OR APPROVED EQUAL.		1100	COMMUNITY CENTER/KITCHEN	EXIST.	SPACKLED AND PRIME PAINTED W/LOW VOC PRIMER. HIGH PERFORMANCE EGGSHELL FRAZEE PAINT WALL COVERING. COLOR: JONESBORO CLC1219W. EUROTILE COMMERCIAL CARPET TILE, MODEL #707102, COLOR: WINDSOR TERRACE AGATE, DIMS. 19.7"X19.7" OR APPROVED EQUAL.	
500	HALLWAYS, GENERAL, KIDS, STUDY CORRALS, MAIN ACCESS, FRONT DESK, TEENS/YOUNG ADULT	EXIST.	SPACKLED AND PRIME PAINTED W/LOW VOC PRIMER. HIGH PERFORMANCE EGGSHELL FRAZEE PAINT WALL COVERING. COLOR: JONESBORO CLC1219W. EUROTILE COMMERCIAL CARPET TILE, MODEL #707102, COLOR: WINDSOR TERRACE AGATE, DIMS. 19.7"X19.7" OR APPROVED EQUAL.	PAINT FOR KIDS AREA SOUTH, EAST AND WEST WALLS SHALL BE HIGH PERFORMANCE EGGSHELL FRAZEE PAINT WALL COVERING COLOR: JUBILEE CLV1116N.	1200	COMMUNITY LOUNGE, COUNCIL CHAMBER	10'-0"	SPACKLED AND PRIME PAINTED W/LOW VOC PRIMER. HIGH PERFORMANCE EGGSHELL FRAZEE PAINT WALL COVERING. COLOR: JONESBORO CLC1219W. EUROTILE COMMERCIAL CARPET TILE, MODEL #707102, COLOR: WINDSOR TERRACE AGATE, DIMS. 19.7"X19.7" OR APPROVED EQUAL.	
600	ADULT/SPECIAL COLLECTIONS	10'-0"	SPACKLED AND PRIME PAINTED W/LOW VOC PRIMER. HIGH PERFORMANCE EGGSHELL FRAZEE PAINT WALL COVERING. COLOR: MORETI CLC1214M. TRAFFICMASTER HANDSCRAPED LAMINATED 7MM THK. FLOORING, MODEL #34089, COLOR: SARATOGA HICKORY, DIMS.7-23/32"X50-3/8" OR APPROVED EQUAL.		1300	CONFERENCE ROOM	10'-0"	SPACKLED AND PRIME PAINTED W/LOW VOC PRIMER. HIGH PERFORMANCE EGGSHELL FRAZEE PAINT WALL COVERING. COLOR: MORETI CLC1214M. EUROTILE COMMERCIAL CARPET TILE, MODEL #707102, COLOR: WINDSOR TERRACE AGATE, DIMS. 19.7"X19.7" OR APPROVED EQUAL.	
700	COMPUTERS	9'-0"	SPACKLED AND PRIME PAINTED W/LOW VOC PRIMER. HIGH PERFORMANCE EGGSHELL FRAZEE PAINT WALL COVERING. COLOR: JUBILEE CLV1116N. EUROTILE COMMERCIAL CARPET TILE, MODEL #707102, COLOR: WINDSOR TERRACE AGATE, DIMS. 19.7"X19.7" OR APPROVED EQUAL.						

SHEET: 8 OF: 26

DWN. BY: A.A.
REV. BY: O.M.
APP. BY: J.G.

LIBRARY EXPANSION PROJECT
FLOOR PLAN
IN THE CITY OF IMPERIAL, CALIFORNIA

DATE: 05/14/15

A5

SEAL: PROFESSIONAL ENGINEER REGISTERED ROBERTO C. MARTINEZ No. C-74475 CIVIL STATE OF CALIFORNIA

BY: ROBERTO C. MARTINEZ
653 W. MAIN ST. SUITE 103
EL CENTRO, CA 92243
DATE: 05/14/15
R.C.E. NO. C-74475

REVISIONS

NO.	DESCRIPTION:	DATE:	BY:

City of Imperial California

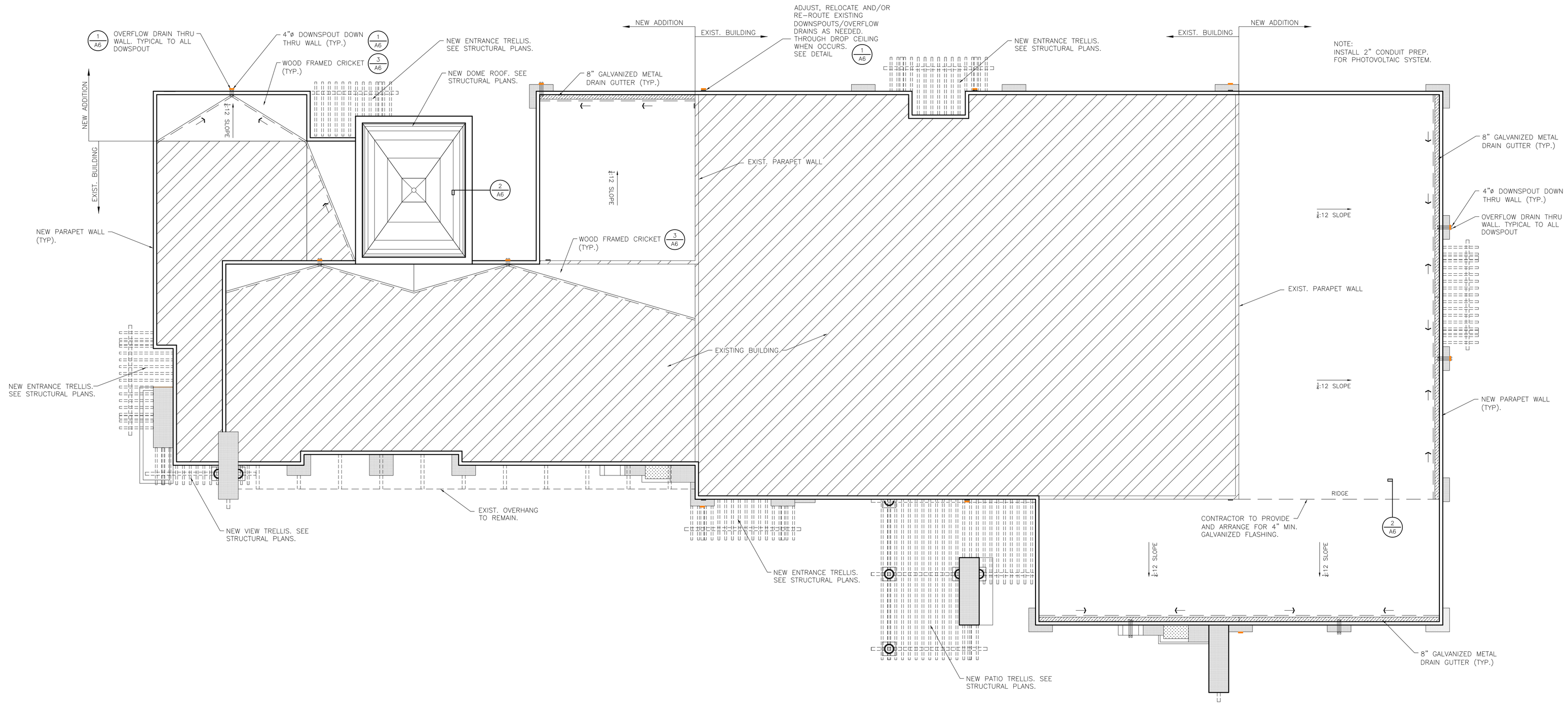

ROOF PLAN

SCALE: 1/8" = 1'

WALL LEGEND

SYMBOL	DESCRIPTION
	EXISTING ROOF TO REMAIN.
	EXPANDED POLYSTYRENE/INDEPENDENT WOOD FRAMING ELEMENTS.
	EXISTING PARAPET WALL TO REMAIN
	NEW PARAPET WALL
	ROOF RIDGE LINE
	FLOW DIRECTION
	EXIST. DOWNSPOUT/OVERFLOW DRAIN
	PROPOSED NEW DOWNSPOUT/OVERFLOW DRAIN

ROOF DRAIN AND RAINWATER/PIPING CALCS.

4" MAX. RAINFALL PER HOUR (MAX.)
NEW ADDITION ROOF AREA = 4,846 SQ.FT.
4,874 S.F. / 6 DRAINS = 812.3 S.F. / PER DRAIN
4"ø PVC DRAIN WILL PROVIDE = 3,460 S.F. ALLOWABLE AREA

DOWNSPOUT/OVERFLOW NOZZLE INFORMATION

WATTS BRAND, MODEL RD-944 DOWNSPOUT NOZZLE, COW TONGUE TYPE CAST NICKEL BRONZE. INLET: 4" PIPE SIZE IPS THREADED CONNECTION. (OR APPROVED EQUAL). CONTRACTOR TO PROVIDE SPECIFIED NOZZLE AT EACH DOWNSPOUT AND OVERFLOW OUTLETS AS PER MANUFACTURER'S RECOMMENDATIONS PRIOR CITY OF IMPERIAL'S STAFF APPROVAL.

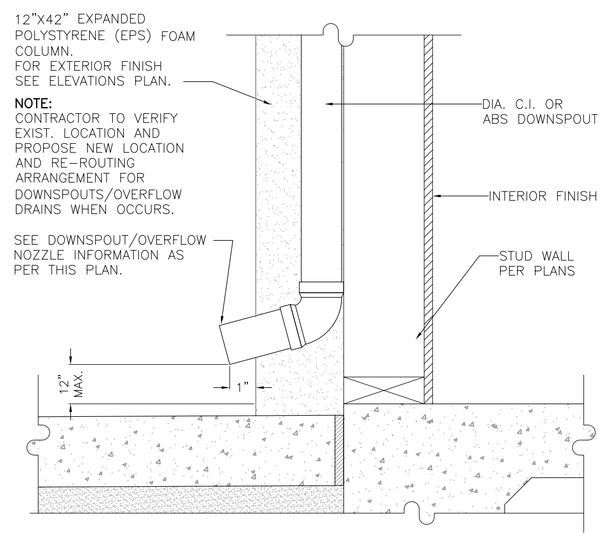

DOWNSPOUT OUTLET AND OVERFLOW DRAIN DETAIL 1

N.T.S.

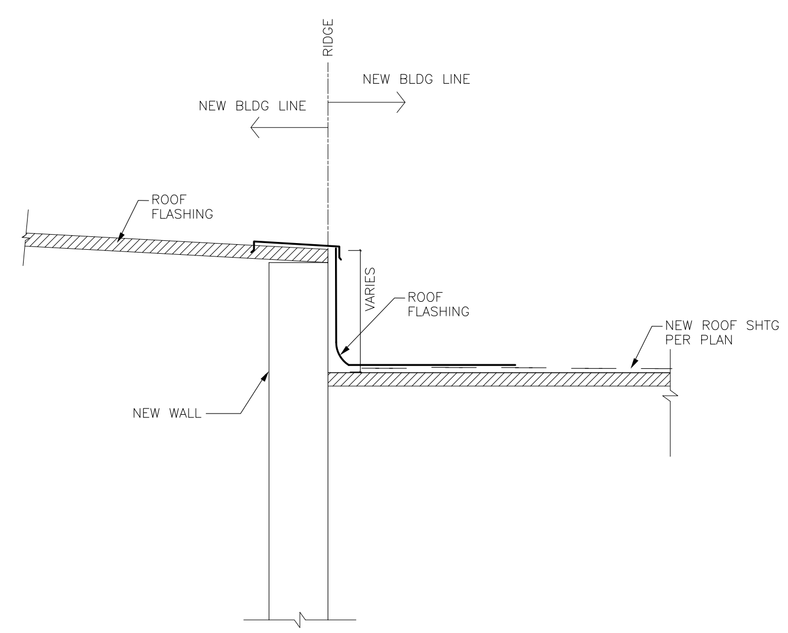

ROOF FLASHING DETAIL 2

N.T.S.

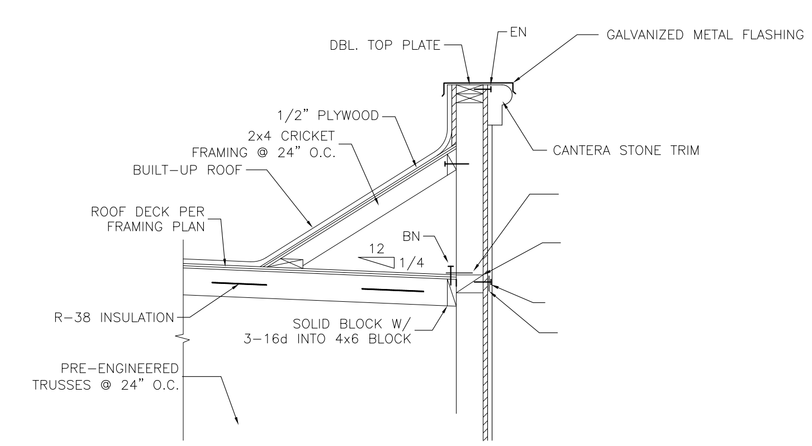

CRICKET/ROOF CONECTION DETAIL 2

N.T.S.

SHEET: 9 OF: 26
DWN. BY: A.A.
REV. BY: O.M.
APP. BY: J.G.

LIBRARY EXPANSION PROJECT
ROOF PLAN
IN THE CITY OF IMPERIAL, CALIFORNIA
DATE: 05/14/15

A6

SEAL: REGISTERED PROFESSIONAL ENGINEER No. C-74475 STATE OF CALIFORNIA CIVIL

BY: ROBERTO C. MARTINEZ
653 W. MAIN ST. SUITE 103
EL CENTRO, CA 92243
DATE: 05/14/15
R.C.E. NO. C-74475

REVISIONS

NO.	DESCRIPTION:	DATE:	BY:
△			
△			
△			

City of Imperial California

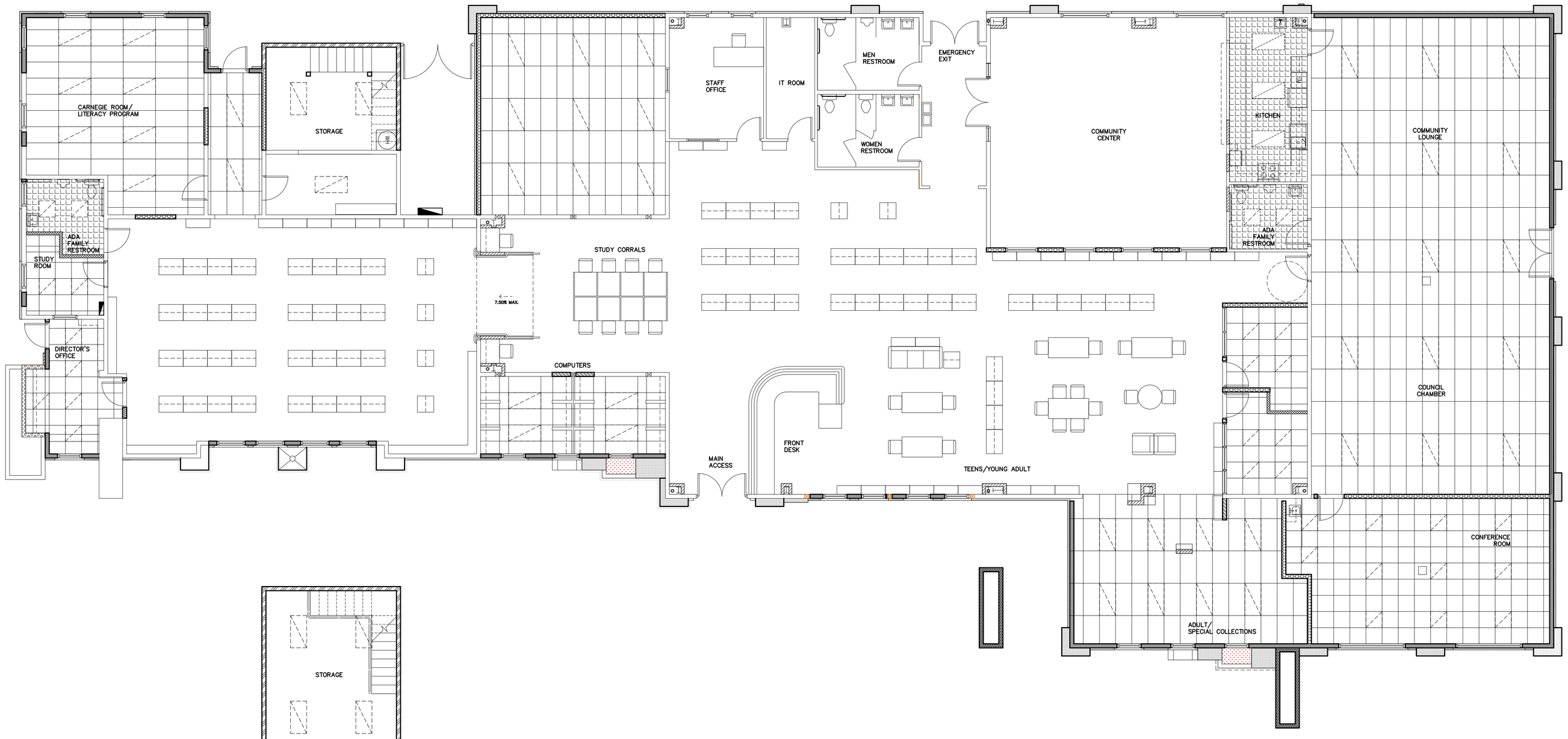

REFLECTIVE CEILING PLAN
UPPER LEVEL

SCALE: 1/8" = 1'

REFLECTIVE CEILING PLAN
LOWER LEVEL

SCALE: 1/8" = 1'

SUSPENDED CEILING LEGEND

SYMBOL	DESCRIPTION
	SUSPENDED CEILING GRID TO BE ARMSTRONG "PRELUDE XL" 9/16" EXPOSED TEE-2'x2' GRID. CEILING TILES TO BE ARMSTRONG "DUNE-FINE TEXTURE" #1774 ANGLED TEGULAR 2'x2'x15/16"TILES.
	SUSPENDED CEILING GRID TO BE ARMSTRONG "PRELUDE XL" 9/16" EXPOSED TEE-2'x4' GRID. CEILING TILES TO BE ARMSTRONG "DUNE-FINE TEXTURE" #1776 ANGLED TEGULAR 2'x4'x15/16"TILES.
	NEW GYPSUM BOARD CEILING.
	PROPOSED LIGHT FIXTURE LOCATION. (REFER TO E1 ELECTRICAL PLAN).

FIXTURES NOTES:

LIGHTING FIXTURES, EGRESS LIGHTING, SPEAKERS, AIR TERMINALS OR MECHANICAL SERVICES WEIGHING UP TO 56 POUNDS AND DIRECTLY SUPPORTED BY THE CEILING GRID SYSTEM SHALL BE POSITIVELY ATTACHED TO THE CEILING SYSTEM. ATTACHMENT SHALL BE MADE WITH A MINIMM OF 4 APPROVED FASTENERS LOCATED WITHIN 3 INCHES OF THE GRID INTERSECTIONS TO SUSPENSION MAIN RUNNERS, OR TO CROSS RUNNERS WITH THE SAME CARRYING CAPACITY AS THE MAIN RUNNERS.
IN ADDITION TO THE ABOVE GRID CONNECTION FIXTURES WEIGHING 20 POUNDS BUT NOT MORE THAN 56 POUNDS, SHALL HAVE TWO 0.080 INCH (12 GAUGE A.W.G.) HANGERS CONNECTED FROM THE FIXTURE TO THE CEILING SYSTEM HANGERS OR TO THE STRUCTURE ABOVE. THESE WIRES MAY BE SLACK.
FIXTURES WEIGHING LESS THAN 20 POUNDS DO NOT REQUIRE SLACK WIRES.
FIXTURES WEIGHING MORE THAN 56 POUNDS SHALL BE SUPPORTED INDEPENDENTLY FROM THE GRID SYSTEM DIRECTLY FROM THE STRUCTURE ABOVE BY APPROVED HANGERS.

SUSPENDED CEILING NOTES:

1.– SUSP. CEILING SHALL COMPLY W/C.B.C. TABLE 25–A AND 16–0
2.– ALL CEILING SHALL USE A HEAVY DUTY T–BAR GRID SYSTEM–ARMSTRONG PRELUDE XL 15/16" (WHITE FINISH).
3.– THE WIDTH OF THE PERIMETER SUPPORTING CLOSURE ANGLE SHALL NOT BE LESS THAN 2 INCHES
4.– IN EACH ORTHOGONAL HORIZONTAL DIRECTION, ONE END OF THE CEILING GRID SHALL BE ATTACHED TO THE CLOSURE ANGLE.
5.– THE OTHER END IN EACH HORIZONTAL DIRECTION SHALL HAVE A 3/4" CLEARANCE FROM THE WALL AND SHALL REST UPON AND BE FREE TO SLIDE ON A CLOSURE ANGLE OR A LISTED ASSEMBLY.
6.– CEILINGS WITHOUT RIDGE BRACING MUST HAVE 2" OVERSIZE TRIM RINGS FOR SPRINKLERS AND OTHER CEILING PENETRATIONS.
7.– SUSPENDED DROP CEILING W/MINERAL ACOUSTIC TEXTURIZED PANELS, (PANEL SIZE AS SPECIFIED ON FINISH SCHEDULE).
8.– ALL CEILINGS SHALL BE FLAT PLANE IN EACH ROOM.
9.– SUSPENDED CEILING PANELS SHALL HAVE RECYCLED CONTENT.
10.– REFER TO LIGHTING PLANS FOR LIGHTING FIXTURES LOCATION AND SPECS.
11.– PROVIDE 3 1/2" SOUND BATT INSULATION FOR ALL SUSPENDED DROP CEILING, THIS ALSO BE PROVIDED WITHIN 8'–0" OF ALL EXISTING OR NEW MECHANICAL UNITS LOCATED WITHIN THE PLENUM SPACE OR ON THE ROOF ABOVE WHERE OCCURS.

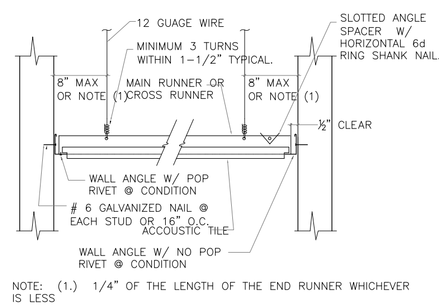

MAIN RUNNER AT WALL (1)
N.T.S.

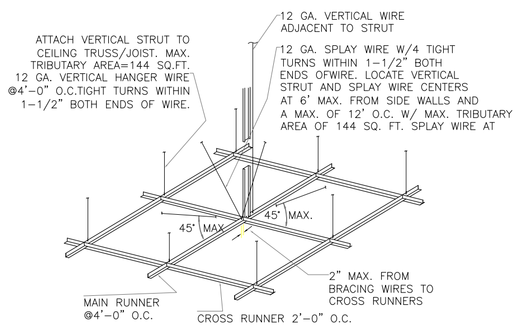

TYPICAL GRID DETAIL (2)
N.T.S.

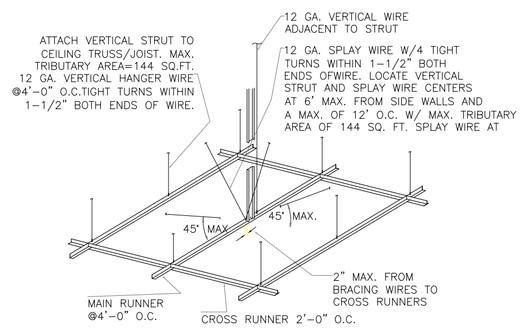

TYPICAL GRID DETAIL (3)
N.T.S.

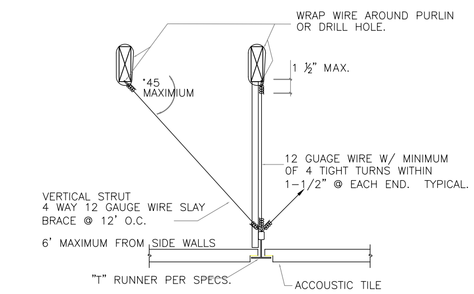

TYPICAL T BAR (4)
N.T.S.

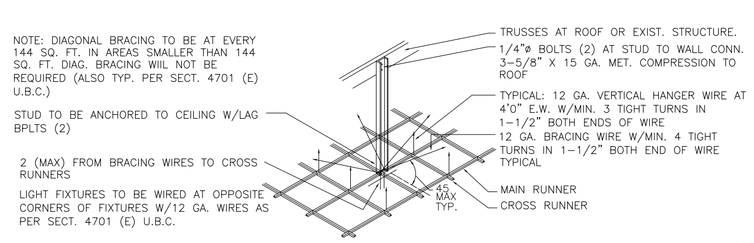

TYP. BRACING AND SUSPENDED CEILING (5)
N.T.S.

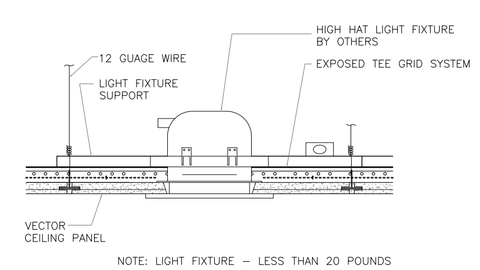

COMPACT LIGHT FIXTURE (6)
N.T.S.

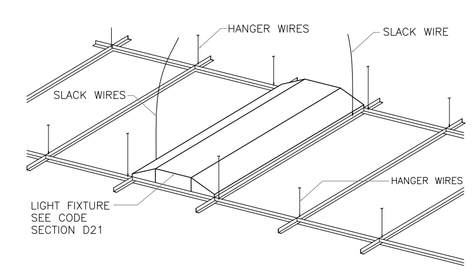

FIXTURE SUPPORT (7)
N.T.S.

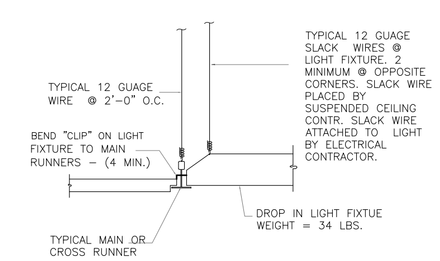

TYPICAL LIGHT FIXTURE (8)
N.T.S.

SHEET: 10
OF: 26
DWN. BY: A.A.
REV. BY: O.M.
APP. BY: J.G.

LIBRARY EXPANSION PROJECT
REFLECTIVE CEILING PLAN
IN THE CITY OF IMPERIAL, CALIFORNIA
DATE: 05/14/15

A7

SEAL:

BY: ROBERTO C. MARTINEZ
653 W. MAIN ST. SUITE 103
EL CENTRO, CA 92243
DATE: 05/14/15
R.C.E. NO. C–74475

REVISIONS

NO.	DESCRIPTION:	DATE:	BY:
1			
2			
3			

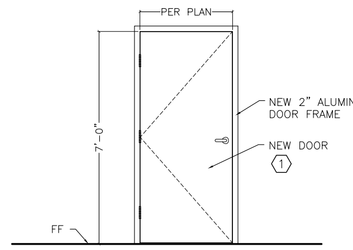

INTERIOR DOOR DETAIL 1
N.T.S.

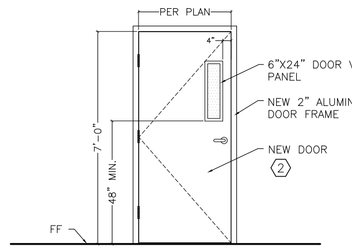

INTERIOR DOOR DETAIL 2
N.T.S.

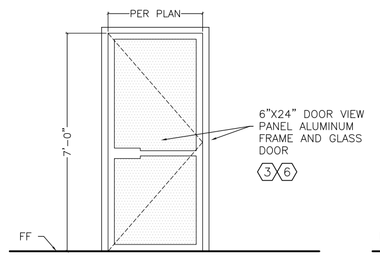

EXTERIOR DOOR DETAIL 3
N.T.S.

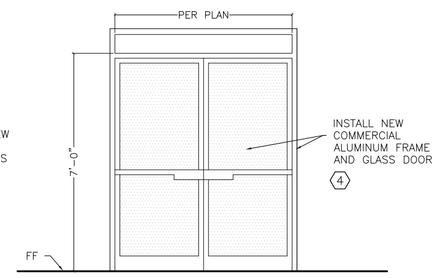

EXTERIOR DOOR DETAIL 4
N.T.S.

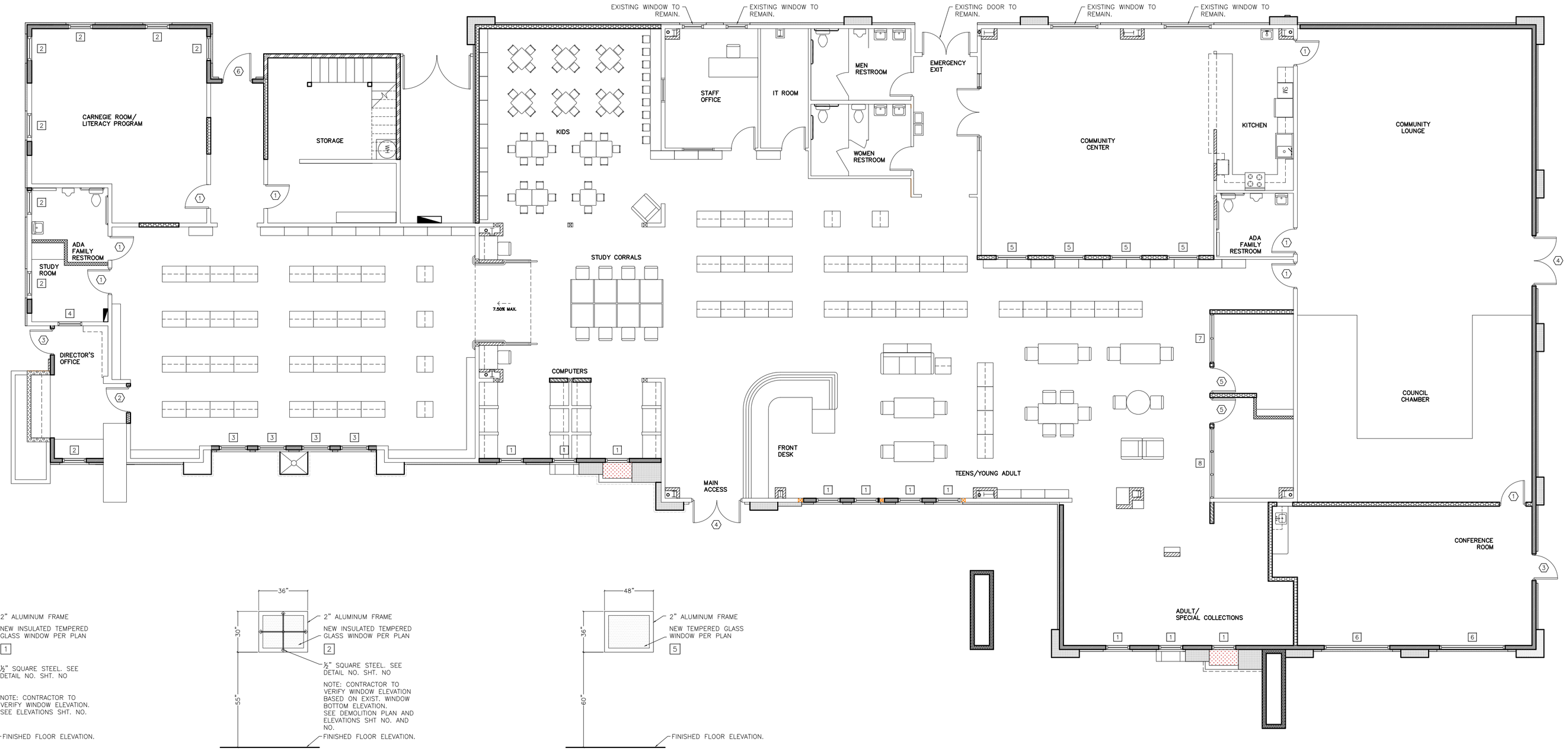

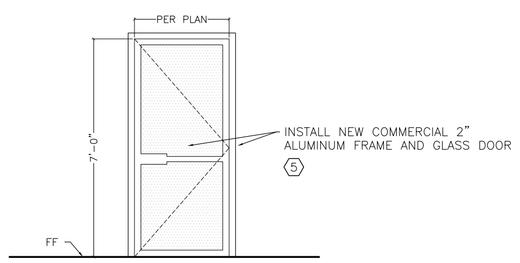

INTERIOR DOOR DETAIL 5
N.T.S.

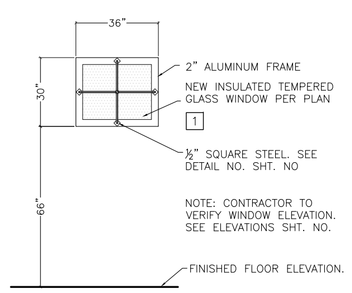

EXTERIOR WINDOW DETAIL 6
N.T.S.

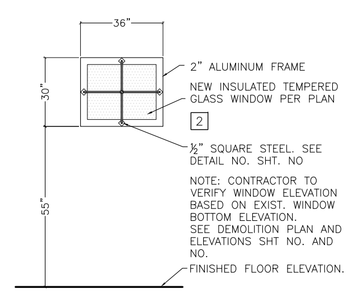

EXTERIOR WINDOW DETAIL 7
N.T.S.

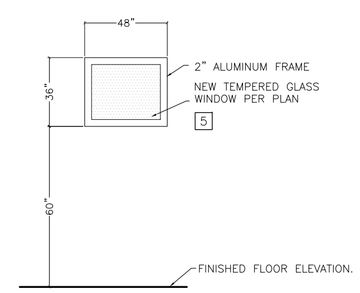

INTERIOR WINDOW DETAIL 8
N.T.S.

DOORS AND WINDOWS PLAN

SCALE: 1/8" = 1'

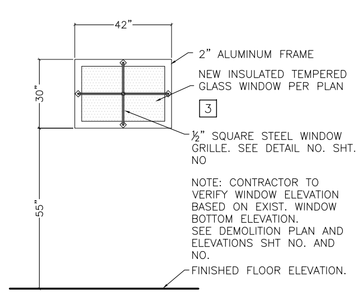

EXTERIOR WINDOW DETAIL 9
N.T.S.

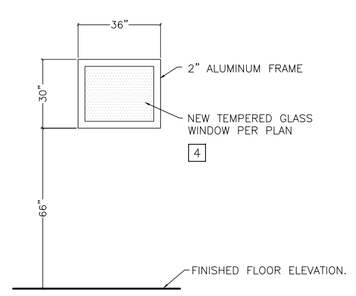

INTERIOR WINDOW DETAIL 10
N.T.S.

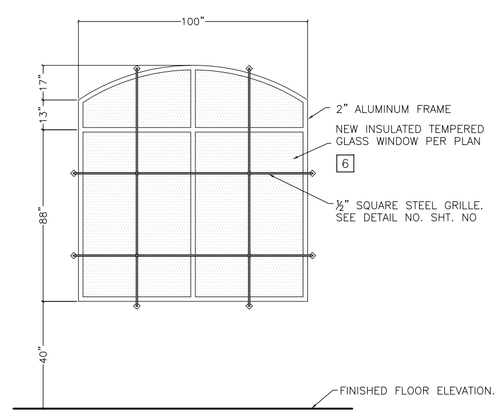

EXTERIOR WINDOW DETAIL 11
N.T.S.

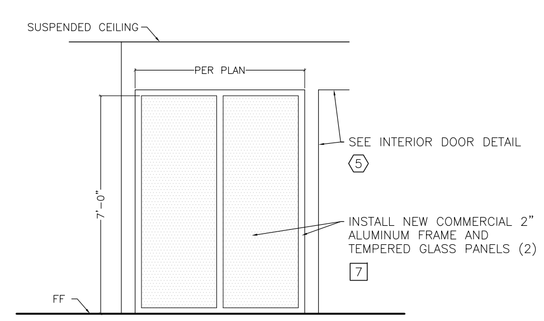

INTERIOR WINDOW PANEL DETAIL 12
N.T.S.

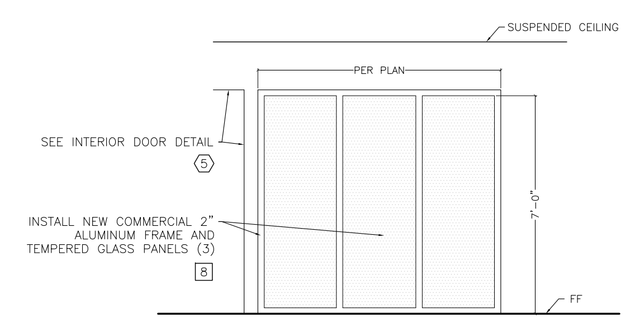

INTERIOR WINDOW PANEL DETAIL 13
N.T.S.

FENESTRATION PERFORMANCE RATINGS

WINDOWS (40% MAXIMUM AREA)			
TYPE	MAXIMUM U-FACTOR	MAXIMUM RSHGC	MINIMUM VT
FIXED	0.36	0.25	0.42
DOORS	0.45	0.23	0.17

DOOR SCHEDULE NOTES

1.– EXIT DOOR TO HAVE SIGN STATING "THIS DOOR TO REMAIN UNLOCKED WHEN BUILDING IS OCCUPIED" AS PER C.B.C. SECTION 1008.1.9.3–2–2.2
2.– EXIT DOORS SHOULD BE OPENABLE FROM INSIDE W/O USE OF A KEY, SPECIAL KNOWLEDGE OR EFFORT
3.– LEVER TYPE HARDWARE TO BE MOUNTED 30" TO 44" ABOVE FLOOR AND OPERABLE W/ MAX. EFFORT OF 8.5 lbs. AT EXTERIOR AND 5lbs. AT INTERIOR, SUCH EFFORT SHALL BE APPLIED AT RIGHT ANGLES TO HINGED DOORS AND AT CENTER PLANE FORSLIDING DOORS, 15lbs. SHALL BE INCREASED AT ALL FIRE RATED DOORS
4.– ALL DOORS SHALL HAVE SMOOTH PLANE SURFACE AT LOWER 10"
5.– SEE ADA ACCESS NOTES FOR DOOR SPECS.
6.– ALL DOORS SHALL BE 20 MIN. FIRE RATED W/ SELF CLOSER.
7.– 6"X24" SAFETY GLASS VIEW PANEL WINDOW AS PART OF DOOR SYSTEM (VERTICAL, 4" OFFSET E.W. FROM HANDLE SIDE ALWAYS).
8.– PUSH–PULL HARDWARE W/O LOCKING DEVICE.
9.– ALL EMERGENCY EXIT DOORS HARDWARE AND LOCKS SHALL BE INSTALLED FOR INSIDE OPENING ONLY.
10.– ALL PUBLIC DOOR SHALL BE EQUIPED W/KICK PLATES.
11.– ALL EXTERIOR DOORS SHALL BE WEATHER–TIGHT.
12.– ALL EXTERIOR DOORS SHALL OPEN OUTWARD OTHERWISE INDICATED ON THE FLOOR PLAN.
13.– INACCESSABLE HINGE PINS OR NON–RISING FIXED–HINGE PINS SHALL BE PROVIDED OR INSTALLED IN A MANNER TO PREVENT DOOR REMOVAL WHEN IT IS CLOSED AND LOCKED.
14.– ALL DOOR LOCK SHALL BE KEY LOCKOUT ONLY.
15.– ALL INTERIOR DOOR SHALL MEET WITH REQUIREMENTS OF BEING A FLUSH, SOLID CORE 1–¾" THICK WHEN WOOD DOORS ARE SPECIFIED.
16.– DOORS FOR EGRESS ONLY SHALL NOT HAVE ANY OPERABLE EXTERIOR HARDWARE.
17.– ALL SECURITY LOCKING–ARRANGEMENTS ON DOORS USED FOR EGRESS SHALL COMPLY WITH REQUIREMENTS OF NFPA 101.
18.– ALL DOORS SHALL HAVE CORRESPONDING SILENCERS AND DOORSTOPS (WALL OR FLOOR MOUNTED).
19.– CONTRACTOR TO PROVIDE SPECIFICATIONS/SUBMITTALS AND SAMPLES FOR DOORS, WINDOWS AND FRAMES BEFORE INSTALLATION FOR REVIEW AND APPROVAL BY THE CITY OF IMPERIAL.

⬡ DOOR SCHEDULE

NO.	SIZE	QTY.	MATERIAL	FINISH	FRAME MATERIAL	FRAME FINISH	LOCK SYSTEM	REMARKS
1	36"X84"	8	NEW SOLID CORE WOOD	NAT. WOOD VENEER	ANODIZED ALUMINUM	PRE–FINISH	LEVER–TYPE STANDARD COMMERCIAL DUTY DOOR HANDLES, SINLGE CYLINDER KEYLOCK W/PUSH–BUTTON. SIMPLEX BRAND OR APPROVED EQUAL.	SMOOTH SURFACE. SEE NOTES: 15 AND 18 COLOR: WALNUT OR APPROVED EQUAL FOR WOOD VENEER, BRONZE FOR ALUMINUM FRAME. 1/A7
2	36"X84"	1	NEW SOLID CORE WOOD	NAT. WOOD VENEER	ANODIZED ALUMINUM	PRE–FINISH	LEVER–TYPE STANDARD COMMERCIAL DUTY DOOR HANDLES, SINLGE CYLINDER KEYLOCK W/PUSH–BUTTON. SIMPLEX BRAND OR APPROVED EQUAL.	SELF CLOSING, 6"X24" DOOR VIEW PANEL. SEE NOTES: 7, 8, 10, 13 AND 18. COLOR: WALNUT OR APPROVED EQUAL FOR WOOD VENEER, BRONZE FOR ALUMINUM FRAME. 2/A7
3	36"X84"	2	NEW INSULATED TEMPERED GLASS /ALUMINUM	PRE–FINISH	ANODIZED ALUMINUM	PRE–FINISH	STANDARD COMMERCIAL DUTY DOOR HANDLES. STANDARD COMMERCIAL TYPE METAL HINGES AND TRACKS. COMBINATION – PUSH BUTTON ELECTRONIC CIPHER LOCK W/KEY OVERRIDE AND KEY LOCKOUT. SIMPLEX BRAND OR APPROVED EQUAL.	SELF CLOSING AND PANIC HARDWARE. SEE NOTES: 8, 10, 13, 17 AND 18. COLOR: BRONZE 3/A7
4	36"X84"	1	NEW INSULATED TEMPERED GLASS /ALUMINUM	PRE–FINISH	ANODIZED ALUMINUM	PRE–FINISH	STANDARD COMMERCIAL DUTY DOOR HANDLES. SINGLE CYLINDER KEYLOCK. STANDARD COMMERCIAL TYPE METAL HINGES AND TRACKS. PANIC HARDWARE W/LOCKING DEVICE. SARGENT BRAND OR APPROVED EQUAL.	SELF CLOSING, TWO (2) PANEL DOOR WITH UPPER PANEL. COLOR: BRONZE 4/A7
5	36"X84"	2	NEW TEMPERED GLASS /ALUMINUM	PRE–FINISH	ANODIZED ALUMINUM	PRE–FINISH	STANDARD COMMERCIAL DUTY DOOR HANDLES. STANDARD COMMERCIAL TYPE METAL HINGES AND TRACKS. SARGENT BRAND OR APPROVED EQUAL.	SELF CLOSING, COLOR: BRONZE 5/A7
6	42"X84"	1	NEW INSULATED TEMPERED GLASS /ALUMINUM	PRE–FINISH	ANODIZED ALUMINUM	PRE–FINISH	STANDARD COMMERCIAL DUTY DOOR HANDLES. STANDARD COMMERCIAL TYPE METAL HINGES AND TRACKS. COMBINATION – PUSH BUTTON ELECTRONIC CIPHER LOCK W/KEY OVERRIDE AND KEY LOCKOUT. SIMPLEX BRAND OR APPROVED EQUAL.	SELF CLOSING AND PANIC HARDWARE. SEE NOTES: 8, 10, 13, 17 AND 18. COLOR: BRONZE 3/A7

☐ WINDOW SCHEDULE

NO.	SIZE	QTY.	MATERIAL	REMARKS
1	30"X36"	10	NEW INSULATED TEMPERED GLASS WINDOW W/2" ALUMINUM FRAME.	COLOR: BRONZE 6/A7
2	30"X36"	8	NEW INSULATED TEMPERED GLASS WINDOW W/2" ALUMINUM FRAME.	COLOR: BRONZE 7/A7
3	30"X42"	4	NEW INSULATED TEMPERED GLASS WINDOW W/2" ALUMINUM FRAME.	COLOR: BRONZE 8/A7
4	30"X36"	1	NEW TEMPERED GLASS WINDOW W/2" ALUMINUM FRAME.	COLOR: BRONZE 9/A7
5	36"X48"	4	NEW TEMPERED GLASS WINDOW W/2" ALUMINUM FRAME.	COLOR: BRONZE 10/A7
6	AS PER PLAN/DET.	2	NEW INSULATED TEMPERED GLASS WINDOW W/2" ALUMINUM FRAME.	COLOR: BRONZE 11/A7
7	AS PER PLAN/DET.	1	NEW INSULATED TEMPERED GLASS WINDOW W/2" ALUMINUM FRAME.	COLOR: BRONZE 12/A7
8	AS PER PLAN/DET.	1	NEW INSULATED TEMPERED GLASS WINDOW W/2" ALUMINUM FRAME.	COLOR: BRONZE 13/A7

SHEET: 11 OF: 26
DWN. BY: A.A.
REV. BY: O.M.
APP. BY: J.G.

LIBRARY EXPANSION PROJECT

DOORS + WINDOWS PLAN

IN THE CITY OF IMPERIAL, CALIFORNIA

DATE: 05/14/15

A8

SEAL:

BY: ROBERTO C. MARTINEZ
653 W. MAIN ST. SUITE 103
EL CENTRO, CA 92243
DATE: 05/14/15
R.C.E. NO. C-74475

REVISIONS

NO.	DESCRIPTION:	DATE:	BY:
△			
△			
△			

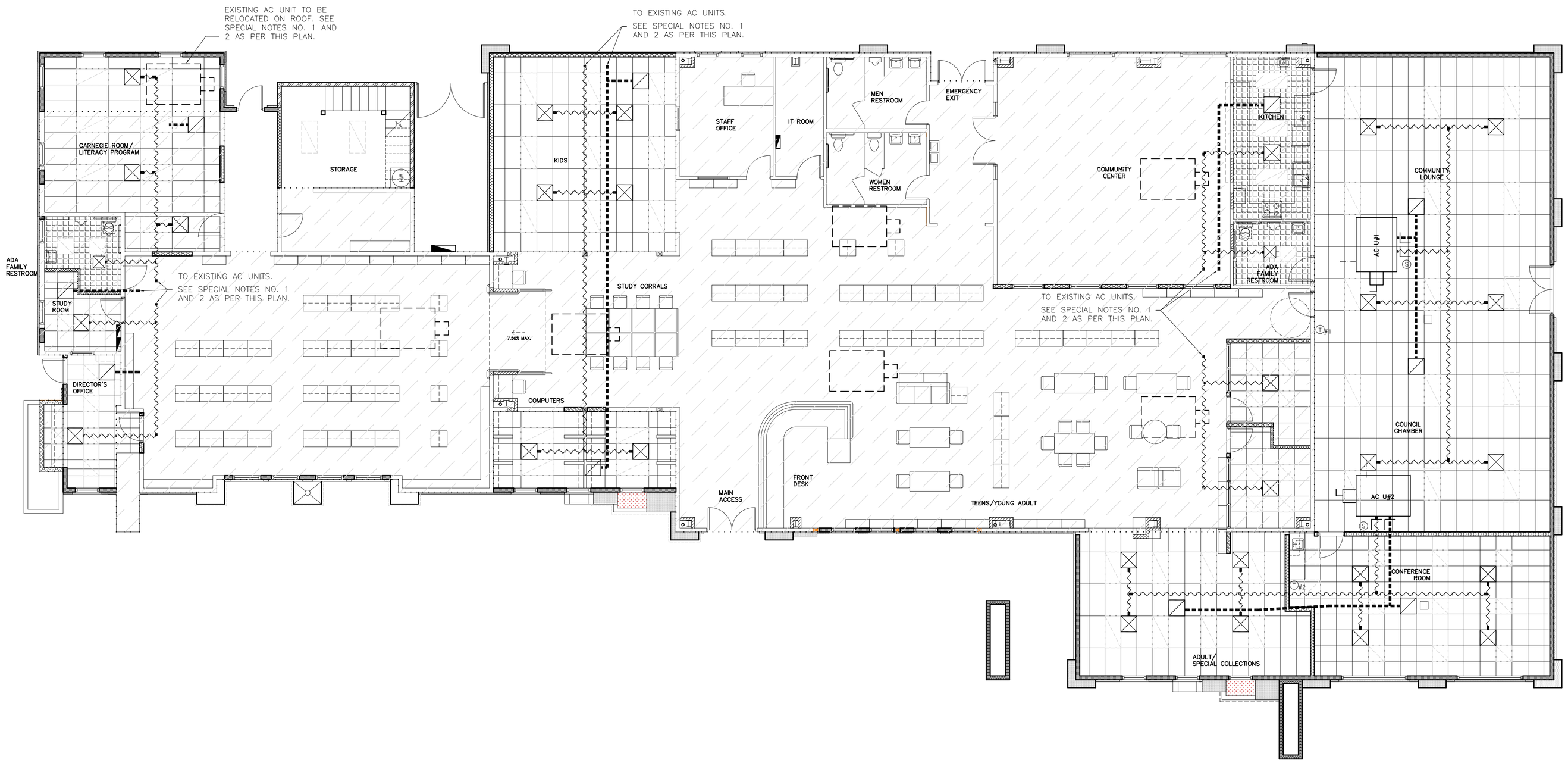

MECHANICAL PLAN

SCALE: 1/8" = 1'

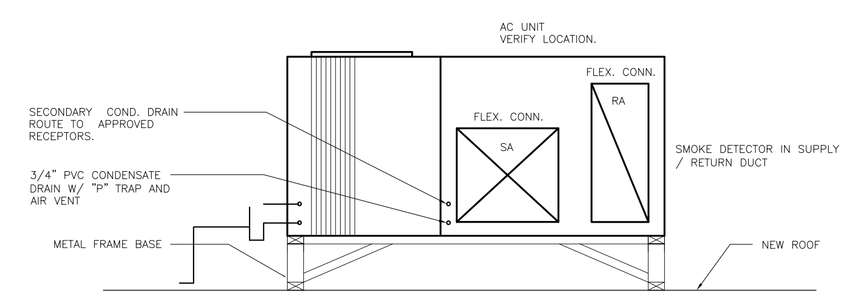

AC MOUNTING DETAIL (1)

N.T.S.

MECHANICAL NOTES

1.– ALL WORK TO BE DONE ACCORDING WITH CALIFORNIA ELECTRICAL CODE 2013 EDITION.

2.– A FLAME SPREAD INDEX OF NOT MORE THAN 25 AND A SMOKE DEVELOPEMENT RATING OF NOT MORE THAN 50 FOR MARERIALS EXPOSED WITHIN THE DUCTS OR PLENUMS.

3.– A FLAME SPREAD OF NOT MORE THAN 25 AND A SMOKE DEVELOPMENT RATING OF NOT MORE THAN 50 FOR INSULATION TO BE APPLIED TO THE EXTERIOR SURFACE OF DUCTS WITHIN THE BUILDING.

4.– PROVIDE 120 OUTLET WITHIN 25' OF HVAC EQUIPTMENT. UMC SEC. 509

5.– SPECIFY ALL EQUIPTMENT SHALL BE LISTED AND LABELED BY AN APPROVED TESTING AGENCY, i.e. U.L.

6.– ALL EXHAUST FAN ROOF TERMINATIONS TO BE CLEAR OF ANY RATED SETBACK AREAS.

7.– FACTORY CONSTRUCTED CLASS 1 AIR DUCTS OF A R–6 INSULATING RATING SHALL BE APPROVED. DUCT STRAPPED EVERY 4' OR LESS PER CODE. ALL DUCT CONNECTIONS TO BE TAPED ON LINER OR VAPOR BARRIER, SECURED WITH DRAW BAND (PANDUIT) STRAPS.

8.– ALL DUCT OPENINGS SHALL BE SEALED AGAINST ELEMENTS AND PROTECTED. ALL EQUIPMENT TO BE SEALED AND PROTECTED AS WELL PER CALIFORNIA GREEN REQUIREMENTS.

9.– ALL DUCT SIZING IN ACCORDANCE WITH ASHRAE STANDARDS AND GUIDELINES.

10.– ALL TESTING AND BALANCING TO BE BY 3RD. PARTY (HERS RATER) AND SHALL FOLLOW GUIDELINES SET FORTH BY CALIFORNIA GREEN CODE 5.410.4 AND 5.410.2. ALL RESULTS TO BE GIVEN TO THE CITY OF IMPERIAL REPRESENTATIVE AT TIME OF COMPLETION AND START UP.

11.– ALL PERFORMANCE MANUALS AND SPEC. SHEETS TO BE SUBMITTED TO THE CITY OF IMPERIAL AT TIME OF START UP AND COMPLETE WALK–THRU OF ALL EQUIPMENT OPERATIONS AND REQUIREMENTS.

MATERIAL FOR DUCTS:

12.– RECTANGULAR DUCTS: 26 GA. SHEET MEATL (GALVANIZED) WITH FSK 1 1/2" w/.75 POUNDS DENSITY AND COVER WITH ALUMINUM JACKET.

13.– FLEXIBLE ROUND DUCTS: 2 PLY POLYESTER CORE AND BLACK POLYETHY JACKETS w/R.8 FIBERGLASS INSULATION

14.– PENETRATIONS OF FIRE RESIST. WALLS, AND ROOF–CEILING SHALL BE PROTECTED AS REQUIRED IN 2010 CBC.

15.– SMOKE DETECTORS SHALL BE PROVIDED IN SUPPLY AIR DUCT OF "AIR–MOVING SYSTEM" FOR REQUIRED SHUT–OFF SMOKE CONTROL AS PER 2013 CBC – FOR EACH UNIT

SPECIAL NOTES

1.– CONTRACTOR TO VERIFY EXISTING AC UNIT LOCATIONS, PROPOSE NEW DUCT ARRANGEMENTS AND PROVIDE CALCULATIONS TO FIT WITH REDEFINED AREAS AS PER THIS PLAN/SET OF PLANS.

2.– CONTRACTOR TO INSTALL GRILLS AS SHOWN ON PLAN. CONNECT DUCT SYSTEM TO THE NEAREST AND/OR MORE SUITABLE EXISTING AC UNIT AS PER HIS CALCULATIONS/RECOMMENDATIONS.

3.– CONTRACTOR TO READ AND REVIEW DAY & NIGHT HEATING AND COOLING PRODUCTS RHH PRODUCT SPECIFICATIONS FOR HIGH EFFICIENCY PACKAGE HEAT PUMPS R–410A SINGLE PACKAGE ROOFTOP FOR SPECIFIED AC UNIT.

MECHANICAL LEGEND

SYMBOL	DESCRIPTION	SYMBOL	DESCRIPTION
AC U#	A.C. PACKAGE UNIT, ROOF MOUNTED		SUPPLY AIR FLEXIBLE DUCT
			RETURN AIR DUCT
	EXISTING A.C. PACKAGE UNIT		3/4" PVC CONDENSATE DRAIN
		(E)	EXHAUST FAN TYPE AND INFORMATION PER ELECTRICAL PLAN.
	24"X24" SUPPLY AIR GRILL		FIRE DAMPER NOTE: FIRE DAMPERS TO BE PROVIDED AT SHAFT FOR SUPPLY AND RETURN DUCTS.
	12"X12" RETURN AIR GRILL	(T) #2	THERMOSTAT/UNIT
	24"X24" RETURN AIR GRILL	(S)	SMOKE DETECTOR NOTE: TO BE PROVIDED AT MAIN SUPPLY AIR DUCT.

A/C UNIT INFORMATION

UNIT	MAKE	MODEL	DESCRIPTION	CAPACITY	VOLTS/PHASE/HZ	MINIMUM BRANCH CIRCUIT	MAXIMUM BRANCH CIRCUIT	BRANCH CIRCUIT CONDUCTOR SIZING:	COOLING NET. CAP. (BTUH)	COOLING SEER	COOLING EER	HEATING HIGH CAP. (BTUH)	HEATING HSPF	HEATING COP
A/C #1	DAY & NIGHT	RHH060*0XA0AAA	ROOF MOUNTED UNIT	5 TON.	208–230/3/60	30.2	45	3–#8, 1–#10 GROUND	5 TON.	15.0	12.5	55,000	8.2	N/A
A/C #2	DAY & NIGHT	RHH060*0XA0AAA	ROOF MOUNTED UNIT	5 TON.	208–230/3/60	30.2	45	3–#8, 1–#10 GROUND	5 TON.	15.0	12.5	55,000	8.2	N/A
						SEER 15 COOL ONLY								

LEGEND

SYMBOL	DESCRIPTION
	EXISING BUILDING
. . . . .	NEW ADDITION/EXIST. BUILDING LIMIT

SHEET: 13 OF: 26

DWN. BY: A.A.
REV. BY: O.M.
APP. BY: J.G.

LIBRARY EXPANSION PROJECT
MECHANICAL PLAN

IN THE CITY OF IMPERIAL, CALIFORNIA

DATE: 05/14/15

M1

SEAL:

BY: ROBERTO C. MARTINEZ
653 W. MAIN ST. SUITE 103
EL CENTRO, CA 92243
DATE: 05/14/15
R.C.E. NO. C–74475

REVISIONS

NO.	DESCRIPTION:	DATE:	BY:

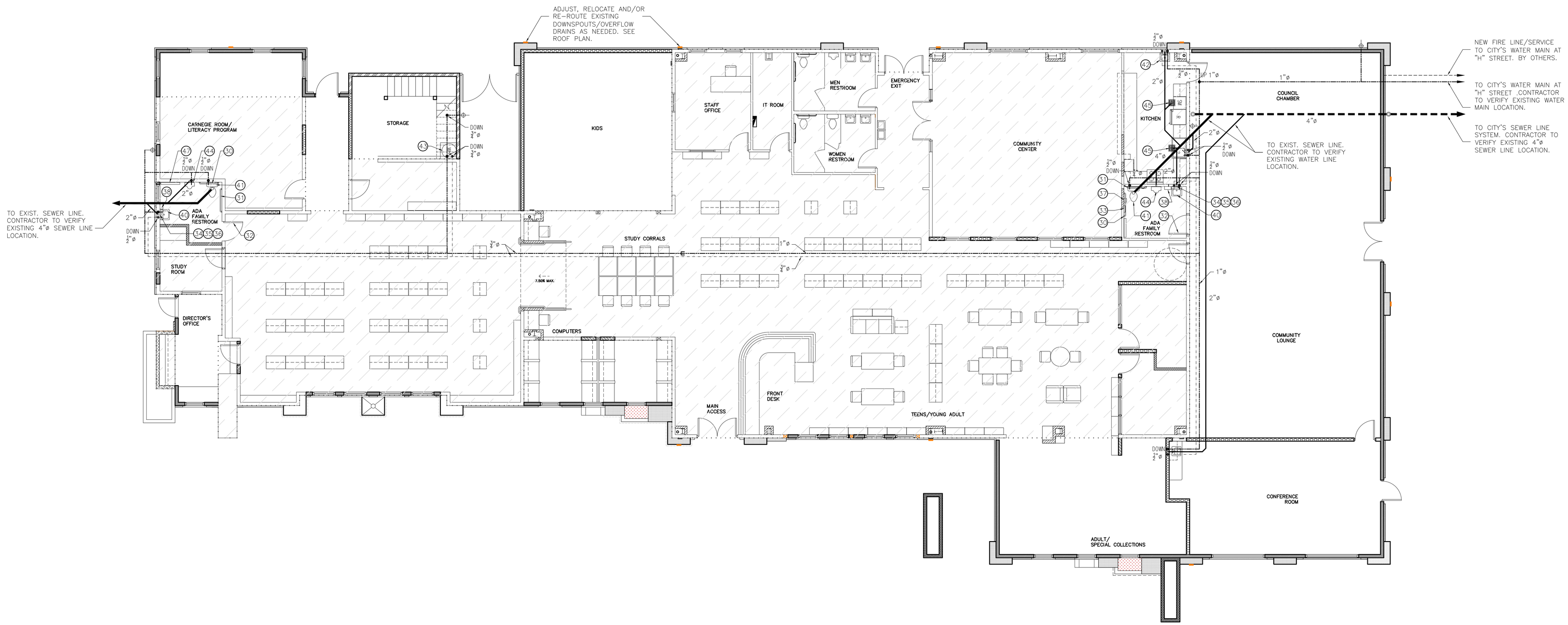

PLUMBING PLAN

SCALE: 1/8" = 1'

PLUMBING NOTES:

1. All equipment to be inst. per manufacture recomendations & local codes.
2. Use copper pipe for water lines.
3. Use A.B.S. sch.40 pipe for sewer.
4. 4" sewer required for (4) w/c toilets.
5. All new meter closet and associated flusho-meter valves. if any, shall use no more than 1.6 gals. per flush.
6. 50 gallons electrical water heater to be wrapped with R-16 value insulation.
7. Water heater to be anchored or strapped to wall, WH. strap @ top 1/3 & bottom 1/3
8. All work shall be done in accordance with these plans and shall be performed with latest industry accepted practices.
9. Plumbing contractor shall furnish all equipment, material, labor, etc., whether shown on these plans or not, necessary to provide a complete, workable, code-approved plumbing system.
10. All lavatories and sinks shall come complete with necessary trim, 'p' traps, tailpiece connections, and required carriers.
11. Provide necessary carriers for all water closets, urinals, and all other plumbing equipment which require them.
12. All hot water lines shall be insulated with 1/2" Armaflex or equal.
13. Plumbing contractor to coordinate all lines and vents with mechanical equipment.
14. Where water and sewer pipes are run in the same trench: a.The bottom of the water pipe at all points shall be at least twelve (12") above the top of the sewer. b.The water pipe shall be placed on a solid shelf excavated at one side of the common trench.
15. All condensate lines shall be trapped and vented at mech. equip. and connected to location shown on plan.
16. All condensate lines shall be sized in accordance with manufac- turer's specifications, but in no case less than 3/4" 40 PVC.
17. Provide access panels for all trap primers.
18. Insulate all condensate drain lines which are located inside the bldg. envelope with 3/8", armaflex or equal.
19. Field verify the exact location, depth, and size of all plbg. utilities prior to the commencement of any work.
20. Flash all pipe penetrations thru the roof in a water-tight manner.
21. trap bags need to comply w/ASTM E-84 25/450 22. Water fixtures 1/2" min. pipe size, 1-1/2" recommended.
22. No flush-type urinals allowed.
23. Check water pressure before flushometer fixture installation.
24. Roof drains shall be installed to receive A/C condensation drainage, one roof drain per every two A/C units. Roof drain discharge shall be conected to the sewer line.

SPECIAL NOTES

1.-CONNECT 2"ø AND 4"ø NEW SANITARY LINES TO EXISTING 4"ø SANITARY WASTE BELOW FLOOR SLAB. CONTRACTOR TO FIELD VERIFY EXACT LOCATION OF EXISTING 4"ø SANITARY WASTE PRIOR TO COMMENCING WORK. CONTRACTOR SHALL BE RESPONSIBLE FOR ALL CUTTING AND PATCHING FLOOR SLAB AS REQUIRED.
2.-ALL EXPOSED PLUMBING, WATER, GAS AND ELECTRICAL LINES/CONDUITS MUST BE INSTALLED AT LEAST 6" ABOVE FLOOR AND AT LEAST 1" AWAY FROM WALLS. (114155).
3.-WHERE PIPES ENTER A WALL, CEILING OR FLOOR, THE OPENING AROUND THE LINE MUST BE TIGHTLY SEALED. (114145, 114030).
4.-POTABLE WATER SUPPLY SHALL BE PROTECTED WITH A BACKFLOW OR BACK-SIPHONAGE PROTECTION DEVICE.
5.-ALL SINKS MUST BE EQUIPPED WITH HOT AND COLD WATER DISPENSED FROM MIXING FAUCETS. HOT WATER MUST BE 49 CELSIUS (120 DEGREES FAHRENHEIT). (114090, 114095).
6.-ONLY WARM WATER MAY BE PROVIDED IF THE WATER SUPPLY IS USED ONLY FOR HANDWASHING, AS REQUIRED IN SECTION 113953, 114192 (d).
7.- SEWER AND WATERLINE'S LOCATION IS SCHEMATIC, CONTRACTOR TO FOLLOW THE SHOWN LINE PATH AS POSSIBLE AND ARRANGE LOCATION AND CONNECTIONS AS THE BEST OF HIS KNOWLEDGE.

LEGEND

SYMBOL	DESCRIPTION
	EXIST. SCH 40 ABS SEWER LINE
	NEW SCH 40 ABS SEWER LINE (DIAM. AS PER PLAN)
	EXIST. COPPER TYPE "M" WATER LINE
	EXIST. COPPER HOT WATER LINE
	EXIST. SEWER CLEAN OUT
	HOSE BIB
	NEW COPPER TYPE "M" WATER LINE
	NEW COPPER HOT WATER LINE
	COPPER REDUCTION
	SEWER CLEAN OUT
	SEWER DISCHARGE
	FLOOR DRAIN
	HOSE BIB
	EXIST. DOWNSPOUT/OVERFLOW DRAIN
	PROPOSED NEW DOWNSPOUT/OVERFLOW DRAIN

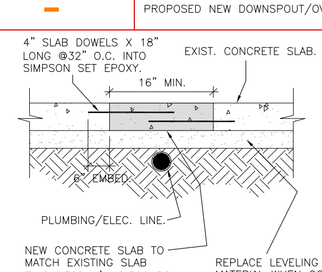

CONCRETE SLAB PATCHING DETAIL (1)

N.T.S.

STANDARD FIXTURE ACCESSORY SCHEDULE

FIXTURE	MANUFACTURER/MODEL	REMARKS	KEYNOTE REF.
1-½" DIAMETER STAILESS STEEL 36" LONG. GRAB BAR WITH SNAP FLANGE AND SATIN FINISH.	BOBRICK B6806 X36		3.0
1-½" DIAMETER STAILESS STEEL 42" LONG. GRAB BAR WITH SNAP FLANGE AND SATIN FINISH.	BOBRICK B6806 X42		3.1
PARTITION MOUNTED CLOTHES HOOK.	BOBRICK B233	ON BACK OF DOOR.	3.2
WALL MOUNTED TOILET SEAT COVER DISPENSER.	BOBRICK B-2111		3.3
ADA APPROVED PLUMBING FIXTURE INSULATING COVER.	KIT PAK 2003 WHITE	FOR USE W/ALL SINKS/LAVATORIES.	3.4
WALL MOUNTED SOAP DISPENSER.	BOBRICK B82216	FOR USE W/ALL WALL MOUNTED LAVATORIES.	3.5
⅛" CLEAR PLATE WALL GLASS MIRROR WITH POLISHED EDGE AND NO FRAME.		MIRROR CUSTOM CUT TO SIZE.	3.6
ROLL PAPER HOLDER WITH NO STOPS.	BOBRICK BOB 667		3.7
WALL MOUNTED PAPER TOWEL DISPENSER.	BOBRICK BOB 262		3.8
WALL MOUNTED ELECTRICAL HAND DRYER PALMER FIXTURE.	ECOSTORM HD941 SS	(OPTIONAL)	3.9

FIXTURE SCHEDULE

SYMBOL	FIXTURE	SIZE/TYPE	MANUFACTURER/ MODEL	BASELINE FLOW RATE	COLOR	CARRIER/TRAP	PIPING SOIL	PIPING VENT	PIPING C.W.	PIPING H.W.	REMARKS	KEYNOTE REF.
	HC. LAVATORY WALL MOUNTED	SELF-RIM. OVAL	MANSFIELD,1917C-4 W.R. (OR APP. EQ.)	0.5 GPM @60 PSI	WHITE	JOSAM 17100-63 1-1/4" 17GA "P" TRAP TRAP BAGS	2"	2"	1/2"	1/2"	2411.015 DRAIN, CHICAGO 802A-335 & L.K. STOPS. PRICE PFISTER FAUCET, FLEX, RISERS PROVIDE ADDITIONAL STEEL ANGLE SUPPORTS.	4.0
	HANDICAP WATER CLOSET	TWO PIECE ELONGATED	MANSFIELD, EASTON (OR APP. EQ.)	1.28 GAL/ FLUSH	WHITE	FLR. MTD. INTEGRAL	4"	2"	1"	–	FLEX, RISER & L.K. STOP, BOLT CAPS, STD. TANK FTGS. OLSONITE 10CC WHITE SEAT.	4.1
	SINGLE BOWL TOP MOUNTED SINK. A.D.A. APP.	15"x15"	ELKAY NEPTUNE MOD. NES15152 (OR APP. EQ.)	0.5 GPM @60 PSI	SILVER/ POLISH		2"	2"	1/2"	1/2"		4.2
	ELECT. COMMERCIAL WATER HEATER SHELF, 50 GAL. 26-½"ø X 43-½" HT.		RHEEM-RUUD, MODEL ES50-12-G (OR APP. EQ.)		WHITE				3/4"	3/4"	12KW/240V/3φ. 99 GAL/HR (GPH) @ 50° RISE. 1-¼" HOT OUTLET AND COLD INLET NPT DIELECTRIC NIPPLE WATER CONNECTION.	4.3
	WALL MOUNTED URINAL	WASH DOWN	MANSFIELD, 401 ADAM (OR APP. EQ.)	0.5 GAL/ FLUSH	WHITE		1-½"	2"	1"	–	PROVIDE ADDITIONAL STEEL ANGLE SUPPORTS, CONCEALED HANGER AND BOLTS.	4.4
	FLOOR SINK											4.5
	FOOD PREPARATION/ VEGETABLE SINK	1 COMPARTMENT SINK WITH 18" INTEGRAL DRAINBOARD	AERO SINK BRAND, MODEL MF1-2116-18	2.2 GPM @60 PSI			2"	2"	1/2"	1/2"	INTEGRAL DRAINBOARD (LEFT), 21" FRONT TO BACK X 16" WIDESINK COMPARTMENTS, 14" DEEP 16/304 STAINLESS STEEL BOWLS, GALVANIZED GUSSETS AND TUBULAR LEGS WITH ADJUSTABLE ABS FEET. NSF APPROVED.	4.6
	BABY CHANGING STATION	35"Wx22-1/2"H	KOALA KARE MOD. KB 900		WHITE						HORIZONTAL TABLE	4.7

WATER HEATER NOTE:

AN EXPANSION TANK OR OTHER APPROVED DEVICE IS REQUIRED IF SYSTEM PRESSURE RELIEF IS NOT AVAILABLE DUE TO THE INSTALLATION OF BACKFLOW DEVICES OR CERTAIN PRESSURE REGULATORS.

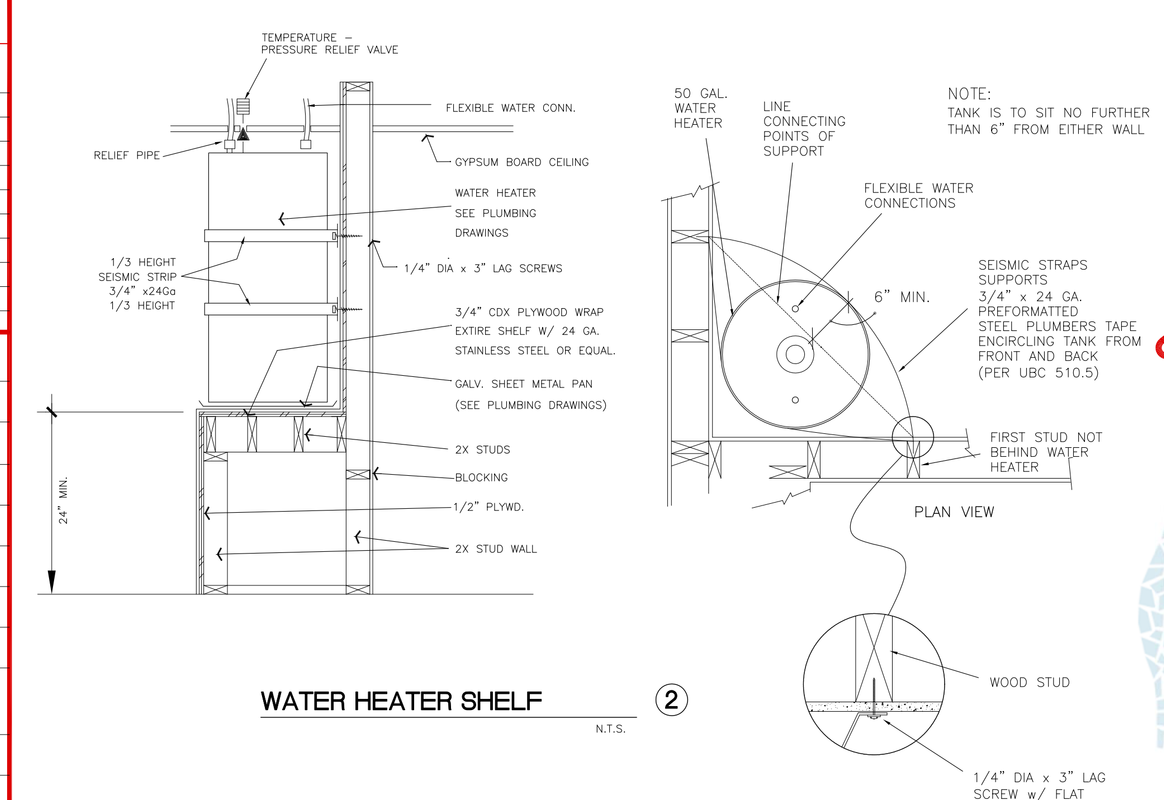

WATER HEATER SHELF (2)

N.T.S.

SHEET: 14 OF: 26

DWN. BY: A.A.
REV. BY: O.M.
APP. BY: J.G.

LIBRARY EXPANSION PROJECT

PLUMBING PLAN

IN THE CITY OF IMPERIAL, CALIFORNIA

DATE: 03/31/15

P1

SEAL: PROFESSIONAL ENGINEER ROBERTO C. MARTINEZ No. C-74475 STATE OF CIVIL CALIFORNIA

BY: ROBERTO C. MARTINEZ
653 W. MAIN ST. SUITE 103
EL CENTRO, CA 92243
DATE: 05/14/15
R.C.E. NO. C-74475

REVISIONS

NO.	DESCRIPTION:	DATE:	BY:
△			
△			
△			

City of Imperial California

ELECTRICAL SYMBOLS LEGEND

	SUBPANEL
	2'x4' FT, LIGHT FIXTURE 4-F32T8 LAMPS, ELECTRONIC BALLAST 120V RECESSED MOUNT
EL	2'x4' FT, LIGHT FIXTURE 4-F32T8 LAMPS, ELECTRONIC BALLAST 120V RECESSED MOUNT W/BATTERY BACK UP
	CR24, 2'x4' FT, ARCHITECTURAL LED TRAFFER, WITH CREE SMARTCAST TECHNOLOGY 40W, 120V RECESSED MOUNT CREE OR SIMILAR
EL	CR24, 2'x4' FT, ARCHITECTURAL LED TRAFFER, WITH CREE SMARTCAST TECHNOLOGY 40W, 120V RECESSED MOUNT W/BATTERY BACK UP CREE OR SIMILAR
	CR24, 2'x4' FT, ARCHITECTURAL LED TRAFFER, WITH CREE SMARTCAST TECHNOLOGY 40W, 120V SURFACE MOUNT CREE OR SIMILAR
	CR22, 2'x2' FT, ARCHITECTURAL LED TROFFER, WITH CREE SMARTCAST TECHNOLOGY 32W, 120V RECESSED MOUNT CREE OR SIMILAR
EL	CR22, 2'x2' FT, ARCHITECTURAL LED TROFFER, WITH CREE SMARTCAST TECHNOLOGY 32W, 120V RECESSED MOUNT W/BATTERY BACKUP CREE OR SIMILAR
	CR22, 2'x2' FT, ARCHITECTURAL LED TROFFER, WITH CREE SMARTCAST TECHNOLOGY 32W, 120V SURFACE MOUNT CREE OR SIMILAR
	LED WALL MOUNT LIGHT FIXTURE 42W, 120V CREE OR SIMILAR
	WALL SCONCE LIGHT FIXTURE, 1-13DTT CFL, ELECTRONIC BALLAST, 120V LITHONIA LIGHTING OR SIMILAR
	CFL DOWNLIGHTING FIXTURE, 1-13DTT CFL, ELECTRONIC BALLAST, 120V LITHONIA LIGHTING OR SIMILAR
	LED DOWNLIGHT FIXTURE 10W, 120V HOUSING 4" CREE OR SIMILAR
	FLOOR SPOT CAT. PDX7 B 12LED CLW MVOLT SP FLCAS 345 LP1 LITHONIA LIGHTING OR SIMILAR
	GARDEN FIXTURE/REFLECTOR CAT. TL4012DLV S F DB W BRONZELITE OR SIMILAR
	OUTDOOR EGRESS EMERGENCY LIGHT 20W.
RPS	REMOTE POWER SUPPLY INPUT 120/277 VCA, OUTPUT 5-24V
EXIT	WALL MOUNTED EXIT LIGHT/SIGN W/ BATTERY BACK-UP
	SINGLE RECEPTACLE OUTLET, 50A, 240V
	DUPLEX RECEPTACLE OUTLET, 20A, 120V
GFCI	DUPLEX RECEPTACLE OUTLET, 20A, 120V WITH GROUND FAULT CIRCUIT INTERRUPTER (GFCI)
	TWO DUPLEX RECEPTACLE OUTLET, 20A, 120V
J	JUNCTION-BOX
	MAIN CIRCUIT BREAKER & DISTRIBUTION PANEL
M	METER SOCKET
	GROUNDING ELECTRODE
T	THERMOSTAT
CONN	CONDUIT/PREPARATION
	TV/CABLE/DATA OUTLET
	MICROPHONE OUTLET
	VOICE & DATA JACK
	PROJECTOR
	EMT CONDUIT
	PVC SCH 40 CONDUIT INSTALLED UNDERGROUND
	SAFETY SWITCH 3P-60A, 240 V, NEMA 3R
	SAFETY SWITCH 3P-30A, 240 V, NEMA 3R
	SAFETY SWITCH 2P-30A, 240 V, NEMA 3R
	EMT CONDUIT AND WIRE HOME RUN TO DESIGNATED CIRCUIT
$	SINGLE POLE SWITCH, 15A, 120V
$	DOUBLE POLE SWITCH, 15A, 120V
	VENTILATION FAN 80 CFM, 0.3 SONES, 0.4A. 120 V. CAT. QTXE080, BROAN OR SIMILAR

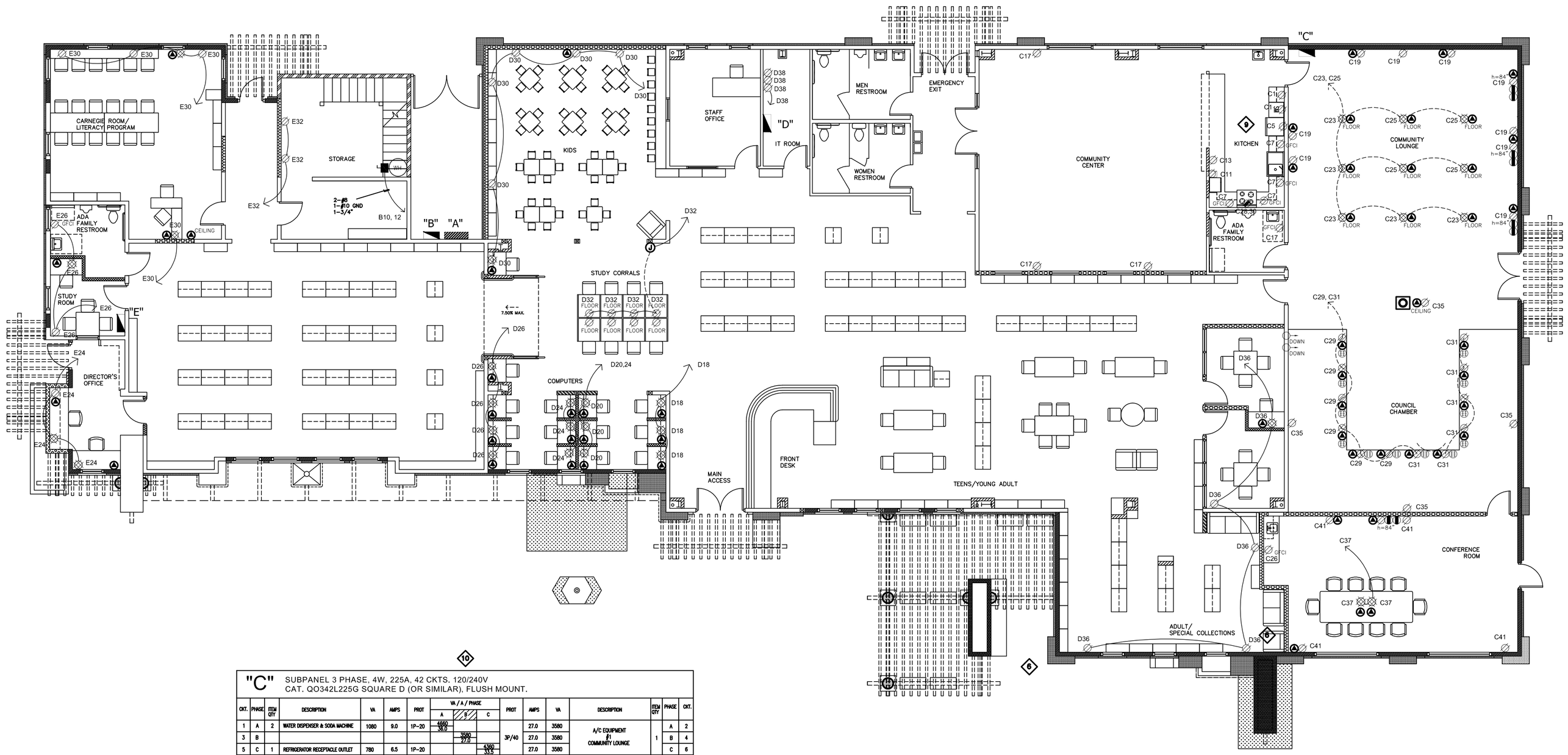

"C" SUBPANEL 3 PHASE, 4W, 225A, 42 CKTS, 120/240V CAT. QO342L225G SQUARE D (OR SIMILAR), FLUSH MOUNT.

CKT.	PHASE	ITEM QTY	DESCRIPTION	VA	AMPS	PROT	VA/A/PHASE A	B	C	PROT	AMPS	VA	DESCRIPTION	ITEM QTY	PHASE	CKT.
1	A	2	WATER DISPENSER & SODA MACHINE	1080	9.0	1P-20	4660 / 36.0			3P/40	27.0	3580	A/C EQUIPMENT #1 COMMUNITY LOUNGE	1	A	2
3	B							3580 / 27.0			27.0	3580			B	4
5	C	1	REFRIGERATOR RECEPTACLE OUTLET	780	6.5	1P-20			4360 / 33.5		27.0	3580			C	6
7	A	4	KITCHEN RECEPTACLE OUTLET	720	6.0	1P-20	4360 / 33.5			3P/40	27.0	3580	A/C EQUIPMENT #2 COUNCIL CHAMBER	1	A	8
9	B							3580 / 27.0			27.0	3580			B	10
11	C	1	MICROWAVE OVEN	1500	12.5	1P-20			5080 / 38.5		27.0	3580			C	12
13	A	1	KITCHEN COFFE MAKER	1600	13.5	1P-20	2198 / 18.3			1P-20	5.0	596	STUDY ROOM & ADULT SPECIAL COLLECTIONS LIGHTS	18	A	14
15	B														B	16
17	C	3	COMMUNITY CENTER RECEPTACLE OUTLETS	540	4.5	1P-20			1540 / 13.2	1P-20	8.3	1000	COMMUNITY CENTER LIGHTS	19	C	18
19	A	9	COMMUNITY LOUNGE RECEPTACLE OUTLETS	1620	13.5	1P-20	1320 / 11.1			1P-20	5.9	710	COMMUNITY LOUNGE LIGHTS	24	A	20
21	B														B	22
23	C	10	COMMUNITY LOUNGE RECEPTACLE OUTLETS	1800	15.0	1P-20			2222 / 18.5	1P-20	3.5	422	CONFERENCE ROOM LIGHTS	14	C	24
25	A	8	COMMUNITY LOUNGE RECEPTACLE OUTLETS	1440	12.0	1P-20	3040 / 25.3			1P-20	13.5	1600	CONFERENCE ROOM COFFE MAKER	1	A	26
27	B							4550 / 37.9		3P/50	37.0	4450	STOVE	1	B	28
29	C	6	COUNCIL CHAMBER RECEPTACLE OUTLETS	1080	9.0	1P-20			5530 / 46.0		37.0	4450			C	30
31	A	6	COUNCIL CHAMBER RECEPTACLE OUTLETS	1080	9.0	1P-20	1080 / 9.0								A	32
33	B														B	34
35	C	4	COUNCIL CHAMBER RECEPTACLE OUTLETS	720	6.0	1P-20			720 / 6.0						C	36
37	A	4	CONFERENCE ROOM RECEPTACLE OUTLETS	720	6.0	1P-20	720 / 6.0								A	38
39	B														B	40
41	C	5	CONFERENCE ROOM RECEPTACLE OUTLETS	900	7.5	1P-20			900 / 7.5						C	42
TOTAL VA/PHASE							17326	11710	20354							
TOTAL AMPERS/PHASE							147.4	91.0	164.0							

"D" SUBPANEL 3 PHASE, 4 W, 120-240V, 225A, 42 CKTS CAT. QO342L225G, SQUARE D (OR SIMILAR), FLUSH MOUNT.

CKT.	PHASE	ITEM QTY	DESCRIPTION	VA	AMPS.	PROT.	VA/A/PHASE A	B	C	PROT.	AMPS.	VA	DESCRIPTION	ITEM QTY	PHASE	CKT.
1	A		EXISTING LIGHTING LOAD			1P-20				1P-20			EXISTING LIGHTING LOAD		A	2
3	B														B	4
5	C		EXISTING LIGHTING LOAD			1P-20				1P-20			EXISTING LIGHTING LOAD		C	6
7	A		EXISTING LIGHTING LOAD			1P-20				1P-20			EXISTING LIGHTING LOAD		A	8
9	B														B	10
11	C		EXISTING LIGHTING LOAD			1P-20				1P-20			EXISTING LIGHTING LOAD		C	12
13	A		EXISTING LIGHTING LOAD			1P-20				1P-20			EXISTING LIGHTING LOAD		A	14
15	B														B	16
17	C	16	KIDS AND COMPUTER AREAS LIGHTS	566	4.7	1P-20			1566 / 13.1	1P-20	9.0	1080	COMPUTER'S AREA RECEPTACLE OUTLETS	6	C	18
19	A						1080 / 9.0			1P-20	9.0	1080	STUDY CORRALS RECEPTACLE OUTLETS	6	A	20
21	B														B	22
23	C								1080 / 9.0	1P-20	9.0	1080	COMPUTER'S AREA RECEPTACLE OUTLETS	6	C	24
25	A						1440 / 12.0			1P-20	12.0	1440	COMPUTER'S AREA RECEPTACLE OUTLETS	8	A	26
27	B														B	28
29	C								1260 / 10.5	1P-20	10.5	1260	KIDS AREA RECEPTACLE OUTLETS	7	C	30
31	A						1440 / 12.0			1P-20	12.0	1440	STUDY CORRAL RECEPTACLE OUTLETS	8	A	32
33	B														B	34
35	C								1080 / 9.0	1P-20	9.0	1080	STUDY ROOM RECEPTACLE OUTLETS	6	C	36
37	A						540 / 4.5			1P-20	4.5	540	IT ROOM RECEPTACLE OUTLETS	3	A	38
39	B														B	40
41	C														C	42
TOTAL VA/PHASE							4500		5046							
TOTAL AMPERS/PHASE							37.5		42.1							

"E" SUBPANEL 3 PHASE, 4 W, 120-240V, 225A, 42 CKTS CAT. QO342L225G, SQUARE D (OR SIMILAR), FLUSH MOUNT.

CKT.	PHASE	ITEM QTY	DESCRIPTION	VA	AMPS.	PROT.	VA/A/PHASE A	B	C	PROT.	AMPS.	VA	DESCRIPTION	ITEM QTY	PHASE	CKT.
1	A		EXISTING LIGHTING LOAD			1P-20				1P-20			EXISTING LIGHTING LOAD		A	2
3	B														B	4
5	C		EXISTING LIGHTING LOAD			1P-20				1P-20			EXISTING LIGHTING LOAD		C	6
7	A		EXISTING LIGHTING LOAD			1P-20				1P-20			EXISTING LIGHTING LOAD		A	8
9	B														B	10
11	C		EXISTING LIGHTING LOAD			1P-20				1P-20			EXISTING LIGHTING LOAD		C	12
13	A		EXISTING LIGHTING LOAD			1P-20				1P-20			EXISTING LIGHTING LOAD		A	14
15	B														B	16
17	C		EXISTING LIGHTING LOAD			1P-20				1P-20			EXISTING LIGHTING LOAD		C	18
19	A		EXISTING LIGHTING LOAD			1P-20				1P-20			EXISTING LIGHTING LOAD		A	20
21	B														B	22
23	C	20	CARNEGIE STUDY ROOMS AND DIRECTOR'S OFFICE LIGHTS	550	4.6	1P-20			1450 / 12.1	1P-20	7.5	900	RECEPTACLE OUTLETS DIRECTOR'S OFFICE	5	C	24
25	A					1P-20	720 / 6.0			1P-20	6.5	720	STUDY, RESTROM RECEPTACLE OUTLETS	4	A	26
27	B														B	28
29	C								1260 / 10.5	1P-20	10.5	1260	CARNEGIE ROOM RECEPTACLE OUTLETS	7	C	30
31	A							360 / 3.0		1P-20	3.0	360	STORAGE RECEPTACLE OUTLETS	2	A	32
33	B														B	34
35	C														C	36
37	A														A	38
39	B														B	40
41	C														C	42
TOTAL VA/PHASE																
TOTAL AMPERS/PHASE																

ELECTRICAL NOTES

1. ALL WORK TO BE DONE ACCORDING WITH CALIFORNIA ELECTRICAL CODE 2013 EDITION.
2. EXISTING A/C UNITS, MOUNTED ON ROOF
3. NEW A/C UNITS, MOUNTED ON ROOF
4. RUN ONE 1/2" EMT CONDUIT FOR THE THERMOSTATS
5. EMT CONDUIT, RUN UNDER THE ROOF INSIDE THE BUILDING
6. EXTERIOR LIGHT FIXTURE CONTROL CIRCUIT B15 – TIMER CIRCUIT B20 – PHOTOCELL & RELAY INSTALL THE TIMER & THE LIGHTING RELAY IN AN ENCLOSURE NEXT TO THE SUBPANEL "B"
7. REPLACE TWO EXISTING SUBPANELS IN STUDY ROOM AREA, FOR A NEW SUBPANEL OF 42 CKTS. THREE PHASE, 120-240V, 225A, CAT. QO342L225G SQUARE D (OR SIMILAR)
8. REPLACE THE EXISTING SUBPANEL ("B") FOR A NEW SUBPANEL OF 42 CKTS. THREE PHASE, 120-240V, 225A CAT. QO342L225GRB SQUARE D (OR SIMILAR)
9. MOVE WIRING FOR THE EXISTING KITCHEN APPLIANCES FROM THE EXISTING SUBPANEL "D" TO THE NEW SUBPANEL "C"
10. PHASE B IS THE HIGH LEG. AND SHALL BE DURABLY AND PERMANENTLY MARKED BY AN OUTER FINISH THAT IS ORANGE IN COLOR, OR BY OTHER EFFECTIVE MEANS.
11. CHANGE THE RATING PLUG IN THE EXISTING MAIN CIRCUIT BREAKER, TO UPGRADE IT, FROM 3P-400A TO 3P-600A. MAIN CIRCUIT BREAKER FRAME CATALOG NUMBER SGHA36AT0600, GE. NEW RATING PLUG CATALOG NUMBER SRPG600A600, GE
12. CONNECT TO THE GENERAL LIGHTING AREA CIRCUITS THE CORRIDOR LIGHTS (2), EXIT SIGNS (2) & OUTDOOR EGRESS LIGHT
13. VERIFY THE RESISTANCE TO GROUND IT IS NOT MORE THAN 25 OHMS ANYTIME, USE SUPLEMENTAL ELECTRODES (METAL WATER PIPE, CONCRETE-ENCASED ELECTRODE OR METAL FRAME OF BUILDING) TO REDUCE RESISTENCE TO GROUND.

SHEET: 1 OF: 4
DWN. BY: L.A.R.
REV. BY: R.L.
APP. BY: R.L.

LIBRARY EXPANSION PROJECT
POWER PLAN
IN THE CITY OF IMPERIAL, CALIFORNIA
DATE: 05/13/15

E01

REGISTERED PROFESSIONAL ENGINEER
JESUS LUIS REYES LEMUS
RE 15446
ELECTRICAL
STATE OF CALIFORNIA
SEAL:

BY:
DATE:
XXXXXX
R.C.E. NO. XXXXX

REVISIONS

NO.	DESCRIPTION:	DATE:	BY:

City of Imperial California

ELECTRICAL SYMBOLS LEGEND

- SUBPANEL
- 2'x4' FT, LIGHT FIXTURE 4-F32T8 LAMPS, ELECTRONIC BALLAST 120V RECESSED MOUNT
- 2'x4' FT, LIGHT FIXTURE 4-F32T8 LAMPS, ELECTRONIC BALLAST 120V RECESSED MOUNT W/BATTERY BACK UP (EL)
- CR24, 2'x4' FT, ARCHITECTURAL LED TRAFFER, WITH CREE SMARTCAST TECHNOLOGY 40W, 120V RECESSED MOUNT CREE OR SIMILAR
- CR24, 2'x4' FT, ARCHITECTURAL LED TRAFFER, WITH CREE SMARTCAST TECHNOLOGY 40W, 120V RECESSED MOUNT W/BATTERY BACK UP CREE OR SIMILAR (EL)
- CR24, 2'x4' FT, ARCHITECTURAL LED TRAFFER, WITH CREE SMARTCAST TECHNOLOGY 40W, 120V SURFACE MOUNT CREE OR SIMILAR
- CR22, 2'x2' FT, ARCHITECTURAL LED TROFFER, WITH CREE SMARTCAST TECHNOLOGY 32W, 120V RECESSED MOUNT CREE OR SIMILAR
- CR22, 2'x2' FT, ARCHITECTURAL LED TROFFER, WITH CREE SMARTCAST TECHNOLOGY 32W, 120V RECESSED MOUNT W/BATTERY BACKUP CREE OR SIMILAR (EL)
- CR22, 2'x2' FT, ARCHITECTURAL LED TROFFER, WITH CREE SMARTCAST TECHNOLOGY 32W, 120V SURFACE MOUNT CREE OR SIMILAR
- LED WALL MOUNT LIGHT FIXTURE 42W, 120V CREE OR SIMILAR
- WALL SCONCE LIGHT FIXTURE, 1-13OTT CFL, ELECTRONIC BALLAST, 120V LITHONIA LIGHTING OR SIMILAR
- CFL DOWNLIGHTING FIXTURE, 1-13OTT CFL, ELECTRONIC BALLAST, 120V LITHONIA LIGHTING OR SIMILAR
- LED DOWNLIGHT FIXTURE 10W, 120V HOUSING 4" CREE OR SIMILAR
- FLOOR SPOT CAT. PDX7 B 12LED CLW MVOLT SP FLCAS 34S LP1 LITHONIA LIGHTING OR SIMILAR
- GARDEN FIXTURE/REFLECTOR CAT. TL4012DLV S F DB W BRONZELITE OR SIMILAR
- OUTDOOR EGRESS EMERGENCY LIGHT 20W,
- RPS REMOTE POWER SUPPLY INPUT 120/277 VCA, OUTPUT 5-24V
- WALL MOUNTED EXIT LIGHT/SIGN W/ BATTERY BACK-UP
- SINGLE RECEPTACLE OUTLET, 50A, 240V
- DUPLEX RECEPTACLE OUTLET, 20A, 120V
- DUPLEX RECEPTACLE OUTLET, 20A, 120V WITH GROUND FAULT CIRCUIT INTERRUPTER (GFCI)
- TWO DUPLEX RECEPTACLE OUTLET, 20A, 120V
- JUNCTION-BOX
- MAIN CIRCUIT BREAKER & DISTRIBUTION PANEL
- METER SOCKET
- GROUNDING ELECTRODE
- THERMOSTAT
- CONDUIT/PREPARATION
- TV/CABLE/DATA OUTLET
- MICROPHONE OUTLET
- VOICE & DATA JACK
- PROJECTOR
- EMT CONDUIT
- PVC SCH 40 CONDUIT INSTALLED UNDERGROUND
- SAFETY SWITCH 3P-60A, 240 V, NEMA 3R
- SAFETY SWITCH 3P-30A, 240 V, NEMA 3R
- SAFETY SWITCH 2P-30A, 240 V, NEMA 3R
- EMT CONDUIT AND WIRE HOME RUN TO DESIGNATED CIRCUIT
- SINGLE POLE SWITCH, 15A, 120V
- DOUBLE POLE SWITCH, 15A, 120V
- VENTILATION FAN 80 CFM, 0.3 SONES, 0.4A. 120 V. CAT. QTXE080, BROAN OR SIMILAR

ELECTRICAL NOTES

1. ALL WORK TO BE DONE ACCORDING WITH CALIFORNIA ELECTRICAL CODE 2013 EDITION.
2. EXISTING A/C UNITS, MOUNTED ON ROOF
3. NEW A/C UNITS, MOUNTED ON ROOF
4. RUN ONE 1/2" EMT CONDUIT FOR THE THERMOSTATS
5. EMT CONDUIT, RUN UNDER THE ROOF INSIDE THE BUILDING
6. EXTERIOR LIGHT FIXTURE CONTROL
   CIRCUIT B18 – TIMER
   CIRCUIT B20 – PHOTOCELL & RELAY
   INSTALL THE TIMER & THE LIGHTING RELAY IN AN ENCLOSURE NEXT TO THE SUBPANEL "B"
7. REPLACE TWO EXISTING SUBPANELS IN STUDY ROOM AREA, FOR A NEW SUBPANEL OF 42 CKTS. THREE PHASE, 120–240V, 225A, CAT. QO342L225G SQUARE D (OR SIMILAR)
8. REPLACE THE EXISTING SUBPANEL ("B") FOR A NEW SUBPANEL OF 42 CKTS. THREE PHASE, 120–240V, 225A CAT. QO342L225GRB SQUARE D (OR SIMILAR)
9. MOVE WIRING FOR THE EXISTING KITCHEN APPLIANCES FROM THE EXISTING SUBPANEL "D" TO THE NEW SUBPANEL "C"
10. PHASE B IS THE HIGH LEG. AND SHALL BE DURABLY AND PERMANENTLY MARKED BY AN OUTER FINISH THAT IS ORANGE IN COLOR, OR BY OTHER EFFECTIVE MEANS.
11. CHANGE THE RATING PLUG IN THE EXISTING MAIN CIRCUIT BREAKER, TO UPGRADE IT, FROM 3P–400A TO 3P–600A. MAIN CIRCUIT BREAKER FRAME CATALOG NUMBER SGHA36AT0600, GE. NEW RATING PLUG CATALOG NUMBER SRPG600A600, GE
12. CONNECT TO THE GENERAL LIGHTING AREA CIRCUITS THE CORRIDOR LIGHTS (2), EXIT SIGNS (2) & OUTDOOR EGRESS LIGHT
13. VERIFY THE RESISTANCE TO GROUND IT IS NOT MORE THAN 25 OHMS ANYTIME, USE SUPLEMENTAL ELECTRODES (METAL WATER PIPE, CONCRETE–ENCASED ELECTRODE OR METAL FRAME OF BUILDING) TO REDUCE RESISTENCE TO GROUND.

"C" SUBPANEL 3 PHASE, 4W, 225A, 42 CKTS. 120/240V
CAT. QO342L225G SQUARE D (OR SIMILAR), FLUSH MOUNT. (10)

CKT.	PHASE	ITEM QTY	DESCRIPTION	VA	AMPS	PROT	VA/A/PHASE A	B	C	PROT	AMPS	VA	DESCRIPTION	ITEM QTY	PHASE	CKT.
1	A	2	WATER DISPENSER & SODA MACHINE	1080	9.0	1P-20	4660 / 36.0			3P/40	27.0	3580	A/C EQUIPMENT #1 COMMUNITY LOUNGE	1	A	2
3	B							3580 / 27.0			27.0	3580			B	4
5	C	1	REFRIGERATOR RECEPTACLE OUTLET	780	6.5	1P-20			4360 / 33.5		27.0	3580			C	6
7	A	4	KITCHEN RECEPTACLE OUTLET	720	6.0	1P-20	4300 / 33.0			3P/40	27.0	3580	A/C EQUIPMENT #2 COUNCIL CHAMBER	1	A	8
9	B							3580 / 27.0			27.0	3580			B	10
11	C	1	MICROWAVE OVEN	1500	12.5	1P-20			5080 / 39.5		27.0	3580			C	12
13	A	1	KITCHEN COFFE MAKER	1600	13.5	1P-20	2196 / 18.5			1P-20	5.0	596	STUDY ROOM & ADULT SPECIAL COLLECTIONS LIGHTS	18	A	14
15	B														B	16
17	C	3	COMMUNITY CENTER RECEPTACLE OUTLETS	540	4.5	1P-20			1540 / 13.0	1P-20	8.3	1000	COMMUNITY CENTER LIGHTS	19	C	18
19	A	9	COMMUNITY LOUNGE RECEPTACLE OUTLETS	1620	13.5	1P-20	1330 / 19.4			1P-20	5.9	710	COMMUNITY LOUNGE LIGHTS	24	A	20
21	B														B	22
23	C	10	COMMUNITY LOUNGE RECEPTACLE OUTLETS	1800	15.0	1P-20			2222 / 18.5	1P-20	3.5	422	CONFERENCE ROOM LIGHTS	14	C	24
25	A	8	COMMUNITY LOUNGE RECEPTACLE OUTLETS	1440	12.0	1P-20	3040 / 25.5			1P-20	13.5	1600	CONFERENCE ROOM COFFE MAKER	1	A	26
27	B							4550 / 37.0		2P/50	37.0	4450	STOVE	1	B	28
29	C	6	COUNCIL CHAMBER RECEPTACLE OUTLETS	1080	9.0	1P-20			5530 / 46.0		37.0	4450			C	30
31	A	6	COUNCIL CHAMBER RECEPTACLE OUTLETS	1080	9.0	1P-20	1080 / 9.0								A	32
33	B														B	34
35	C	4	COUNCIL CHAMBER RECEPTACLE OUTLETS	720	6.0	1P-20			720 / 6.0						C	36
37	A	4	CONFERENCE ROOM RECEPTACLE OUTLETS	720	6.0	1P-20	720 / 6.0								A	38
39	B														B	40
41	C	5	CONFERENCE ROOM RECEPTACLE OUTLETS	900	7.5	1P-20			900 / 7.5						C	42
			TOTAL VA/PHASE				17326	11710	20354							
			TOTAL AMPERS/PHASE				147.4	91.0	164.0							

"D" SUBPANEL 3 PHASE, 4 W, 120-240V, 225A, 42 CKTS
CAT. QO342L225G, SQUARE D (OR SIMILAR), FLUSH MOUNT. (10)

CKT.	PHASE	ITEM QTY	DESCRIPTION	VA	AMPS.	PROT.	VA/A/PHASE A	B	C	PROT.	AMPS.	VA	DESCRIPTION	ITEM QTY	PHASE	CKT.
1	A		EXISTING LIGHTING LOAD			1P-20				1P-20			EXISTING LIGHTING LOAD		A	2
3	B														B	4
5	C		EXISTING LIGHTING LOAD			1P-20				1P-20			EXISTING LIGHTING LOAD		C	6
7	A		EXISTING LIGHTING LOAD			1P-20				1P-20			EXISTING LIGHTING LOAD		A	8
9	B														B	10
11	C		EXISTING LIGHTING LOAD			1P-20				1P-20			EXISTING LIGHTING LOAD		C	12
13	A		EXISTING LIGHTING LOAD			1P-20				1P-20			EXISTING LIGHTING LOAD		A	14
15	B														B	16
17	C	16	KIDS AND COMPUTER AREAS LIGHTS	566	4.7	1P-20			1646 / 13.7	1P-20	9.0	1080	COMPUTER'S AREA RECEPTACLE OUTLETS	6	C	18
19	A						1080 / 9.0			1P-20	9.0	1080	STUDY CORRALS RECEPTACLE OUTLETS	6	A	20
21	B														B	22
23	C								1080 / 9.0	1P-20	9.0	1080	COMPUTER'S AREA RECEPTACLE OUTLETS	6	C	24
25	A						1440 / 12.0			1P-20	12.0	1440	COMPUTER'S AREA RECEPTACLE OUTLETS	8	A	26
27	B														B	28
29	C								1260 / 10.5	1P-20	10.5	1260	KIDS AREA RECEPTACLE OUTLETS	7	C	30
31	A						1440 / 12.0			1P-20	12.0	1440	STUDY CORRAL RECEPTACLE OUTLETS	8	A	32
33	B														B	34
35	C								1080 / 9.0	1P-20	9.0	1080	STUDY ROOM RECEPTACLE OUTLETS	6	C	36
37	A						540 / 4.5			1P-20	4.5	540	IT ROOM RECEPTACLE OUTLETS	3	A	38
39	B														B	40
41	C														C	42
			TOTAL VA/PHASE				4500		5046							
			TOTAL AMPERS/PHASE				37.5		42.1							

LUMINAIRE SCHEDULE

SYMBOL	QTY	CATALOG NUMBER	DESCRIPTION	LAMP	LUMENS	WATTS/EACH	VOLTS	BALLAST	MANUFACTURER
	63	EXISTING	RECESSED 2'x4' FT LIGHT FIXTURE	4-F32T8	4x2800	128	120	ELECTRONIC	EXISTING
	5	2GTB432A19 MVOLT GEB10IS EL	RECESSED 2'x4' FT LIGHT FIXTURE W/BATTERY BACKUP	4-F32T8	4x2800	128	120	ELECTRONIC	LITHONIA LIGHTING OR SIMILAR
	42	CR24 40L 40K5	RECESSED 2'x4' FT ARCHITECTURAL LED TROFFER	LED	4000	40	120	ELECTRONIC	CREE OR SIMILAR
	3	CR24 40L 40K5 EB14	RECESSED 2'x4' FT ARCHITECTURAL LED TROFFER FIXTURE W/BATTERY BACKUP	LED	4000	40	120	ELECTRONIC	CREE OR SIMILAR
	6	CR24 40L 40K5	SURFACE MOUNT 2'x4' FT ARCHITECTURAL LED TROFFER	LED	4000	40	120	ELECTRONIC	CREE OR SIMILAR
	23	CR22 32L40K5	RECESSED 2'x2' FT ARCHITECTURAL LED TROFFER	LED	3200	32	120	ELECTRONIC	CREE OR SIMILAR
	1	CR22 32L40K5 EB14	RECESSED 2'x2' FT ARCHITECTURAL LED TROFFER W/ BATTERY BACK UP	LED	3200	32	120	ELECTRONIC	CREE OR SIMILAR
	4	CR2232L35KCMA	SURFACE MOUNT 2'x2' FT ARCHITECTURAL LED TROFFER	LED	3200	32	120	ELECTRONIC	CREE OR SIMILAR
	9	XSPW A02 FC 12P	EXTERIOR WALL MOUNT LIGHT FIXTURE	LED	2814	42	120	ELECTRONIC	CREE OR SIMILAR
	2	AVSP1 13OTT MDM 120	WALL SCONCE LIGHT FIXTURE	13OTT	735	13	120	ELECTRONIC	LITHONIA LIGHTING OR SIMILAR
	13	AFV 13OTT 4 MB LD CGL 120	CFL DOWNLIGHTING FIXTURE	13OTT	735	13	120	ELECTRONIC	LITHONIA LIGHTING OR SIMILAR
	16	KR 4BL 27K 120 +KR4?	LED DOWNLIGHTING FIXTURE	LED	660	10	120	ELECTRONIC	CREE OR SIMILAR
	23	PDX7 B 12LED CLW MVOLT SP FLCAS 34S LP1	FLOOR SPOT LUMINAIRE	LED	780	12	120	ELECTRONIC	LITHONIA LIGHTING OR SIMILAR
	14	TL4012DLV S F DB W	GARDEN FIXTURE/ REFLECTOR	LED	780	12	120	ELECTRONIC	BRONZELITE OR SIMILAR
	7	LHQMSW3RN	WALL MOUNTED EXIT LIGHT/SIGN W/ BATTERY BACK-UP	LED	90	32	120	ELECTRONIC	LITHONIA LIGHTING OR SIMILAR
	4	MUEBB20BTDG	OUTDOOR EGRESS EMERGENCY LIGHT	LED	1300	20	120	ELECTRONIC	SIGNTEX INC. LIGHTING OR SIMILAR

"E" SUBPANEL 3 PHASE, 4 W, 120-240V, 225A, 42 CKTS
CAT. QO342L225G, SQUARE D (OR SIMILAR), FLUSH MOUNT. (10)

CKT.	PHASE	ITEM QTY	DESCRIPTION	VA	AMPS.	PROT.	VA/A/PHASE A	B	C	PROT.	AMPS.	VA	DESCRIPTION	ITEM QTY	PHASE	CKT.
1	A		EXISTING LIGHTING LOAD			1P-20				1P-20			EXISTING LIGHTING LOAD		A	2
3	B														B	4
5	C		EXISTING LIGHTING LOAD			1P-20				1P-20			EXISTING LIGHTING LOAD		C	6
7	A		EXISTING LIGHTING LOAD			1P-20				1P-20			EXISTING LIGHTING LOAD		A	8
9	B														B	10
11	C		EXISTING LIGHTING LOAD			1P-20				1P-20			EXISTING LIGHTING LOAD		C	12
13	A		EXISTING LIGHTING LOAD			1P-20				1P-20			EXISTING LIGHTING LOAD		A	14
15	B														B	16
17	C		EXISTING LIGHTING LOAD			1P-20				1P-20			EXISTING LIGHTING LOAD		C	18
19	A		EXISTING LIGHTING LOAD			1P-20				1P-20			EXISTING LIGHTING LOAD		A	20
21	B														B	22
23	C	20	CARNEGIE STUDY ROOMS AND DIRECTOR'S OFFICE LIGHTS	550	4.6	1P-20			1450 / 12.1	1P-20	7.5	900	RECEPTACLE OUTLETS DIRECTOR'S OFFICE	5	C	24
25	A					1P-20	720 / 6.5			1P-20	6.5	720	STUDY, RESTROOM RECEPTACLE OUTLETS	4	A	26
27	B														B	28
29	C								1260 / 10.5	1P-20	10.5	1260	CARNEGIE ROOM RECEPTACLE OUTLETS	7	C	30
31	A						360 / 3.0			1P-20	3.0	360	STORAGE RECEPTACLE OUTLETS	2	A	32
33	B														B	34
35	C														C	36
37	A														A	38
39	B														B	40
41	C														C	42
			TOTAL VA/PHASE													
			TOTAL AMPERS/PHASE													

City of Imperial California

REVISIONS

NO.	DESCRIPTION:	DATE:	BY:
△			
△			
△			

BY:
DATE:
XXXXXX
R.C.E. NO. XXXXX

SEAL: REGISTERED PROFESSIONAL ENGINEER JOSE LUIS REYES LEMUS E 15446 ELECTRICAL STATE OF CALIFORNIA

E02

LIBRARY EXPANSION PROJECT

LIGHTING PLAN

IN THE CITY OF IMPERIAL, CALIFORNIA | DATE: 05/13/15

SHEET: 2 OF: 4
DWN. BY: L.A.R.
REV. BY: R.L.
APP. BY: R.L.

ELECTRICAL SYMBOLS LEGEND

SYMBOL	DESCRIPTION
	SUBPANEL
	2'x4' FL LIGHT FIXTURE 4-F32T8 LAMPS, ELECTRONIC BALLAST 120V RECESSED MOUNT
EL	2'x4' FL LIGHT FIXTURE 4-F32T8 LAMPS, ELECTRONIC BALLAST 120V RECESSED MOUNT W/BATTERY BACK UP
	CR24, 2'x4' FT, ARCHITECTURAL LED TRAFFER, WITH CREE SMARTCAST TECHNOLOGY 40W, 120V RECESSED MOUNT CREE OR SIMILAR
EL	CR24, 2'x4' FT, ARCHITECTURAL LED TRAFFER, WITH CREE SMARTCAST TECHNOLOGY 40W, 120V RECESSED MOUNT W/BATTERY BACK UP CREE OR SIMILAR
	CR24, 2'x4' FT, ARCHITECTURAL LED TRAFFER, WITH CREE SMARTCAST TECHNOLOGY 40W, 120V SURFACE MOUNT CREE OR SIMILAR
	CR22, 2'x2' FT, ARCHITECTURAL LED TROFFER, WITH CREE SMARTCAST TECHNOLOGY 32W, 120V RECESSED MOUNT CREE OR SIMILAR
EL	CR22, 2'x2' FT, ARCHITECTURAL LED TROFFER, WITH CREE SMARTCAST TECHNOLOGY 32W, 120V RECESSED MOUNT W/BATTERY BACKUP CREE OR SIMILAR
	CR22, 2'x2' FT, ARCHITECTURAL LED TROFFER, WITH CREE SMARTCAST TECHNOLOGY 32W, 120V SURFACE MOUNT CREE OR SIMILAR
	LED WALL MOUNT LIGHT FIXTURE 42W, 120V CREE OR SIMILAR
	WALL SCONCE LIGHT FIXTURE, 1-13DTT CFL, ELECTRONIC BALLAST, 120V LITHONIA LIGHTING OR SIMILAR
	CFL DOWNLIGHTING FIXTURE, 1-13DTT CFL, ELECTRONIC BALLAST, 120V LITHONIA LIGHTING OR SIMILAR
	LED DOWNLIGHT FIXTURE 10W, 120V HOUSING 4" CREE OR SIMILAR
	FLOOR SPOT CAT. PDX7 B 12LED CLW MVOLT SP FLCAS 34S LP1 LITHONIA LIGHTING OR SIMILAR
	GARDEN FIXTURE/REFLECTOR CAT. TL4012DLV S F DB W BRONZELITE OR SIMILAR
	OUTDOOR EGRESS EMERGENCY LIGHT 20W,
RPS	REMOTE POWER SUPPLY INPUT 120/277 VCA, OUTPUT 5-24V
EXIT	WALL MOUNTED EXIT LIGHT/SIGN W/ BATTERY BACK-UP
	SINGLE RECEPTACLE OUTLET, 50A, 240V
	DUPLEX RECEPTACLE OUTLET, 20A, 120V
GFCI	DUPLEX RECEPTACLE OUTLET, 20A, 120V WITH GROUND FAULT CIRCUIT INTERRUPTER (GFCI)
	TWO DUPLEX RECEPTACLE OUTLET, 20A, 120V
J	JUNCTION-BOX
	MAIN CIRCUIT BREAKER & DISTRIBUTION PANEL
M	METER SOCKET
	GROUNDING ELECTRODE
T	THERMOSTAT
DOWN	CONDUIT/PREPARATION
	TV/CABLE/DATA OUTLET
	MICROPHONE OUTLET
	VOICE & DATA JACK
	PROJECTOR
	EMT CONDUIT
	PVC SCH 40 CONDUIT INSTALLED UNDERGROUND
	SAFETY SWITCH 3P-60A, 240 V, NEMA 3R
	SAFETY SWITCH 3P-30A, 240 V, NEMA 3R
	SAFETY SWITCH 2P-30A, 240 V, NEMA 3R
	EMT CONDUIT AND WIRE HOME RUN TO DESIGNATED CIRCUIT
$	SINGLE POLE SWITCH, 15A, 120V
$2	DOUBLE POLE SWITCH, 15A, 120V
	VENTILATION FAN 80 CFM, 0.3 SONES, 0.4A. 120 V. CAT. QTXE080, BROAN OR SIMILAR

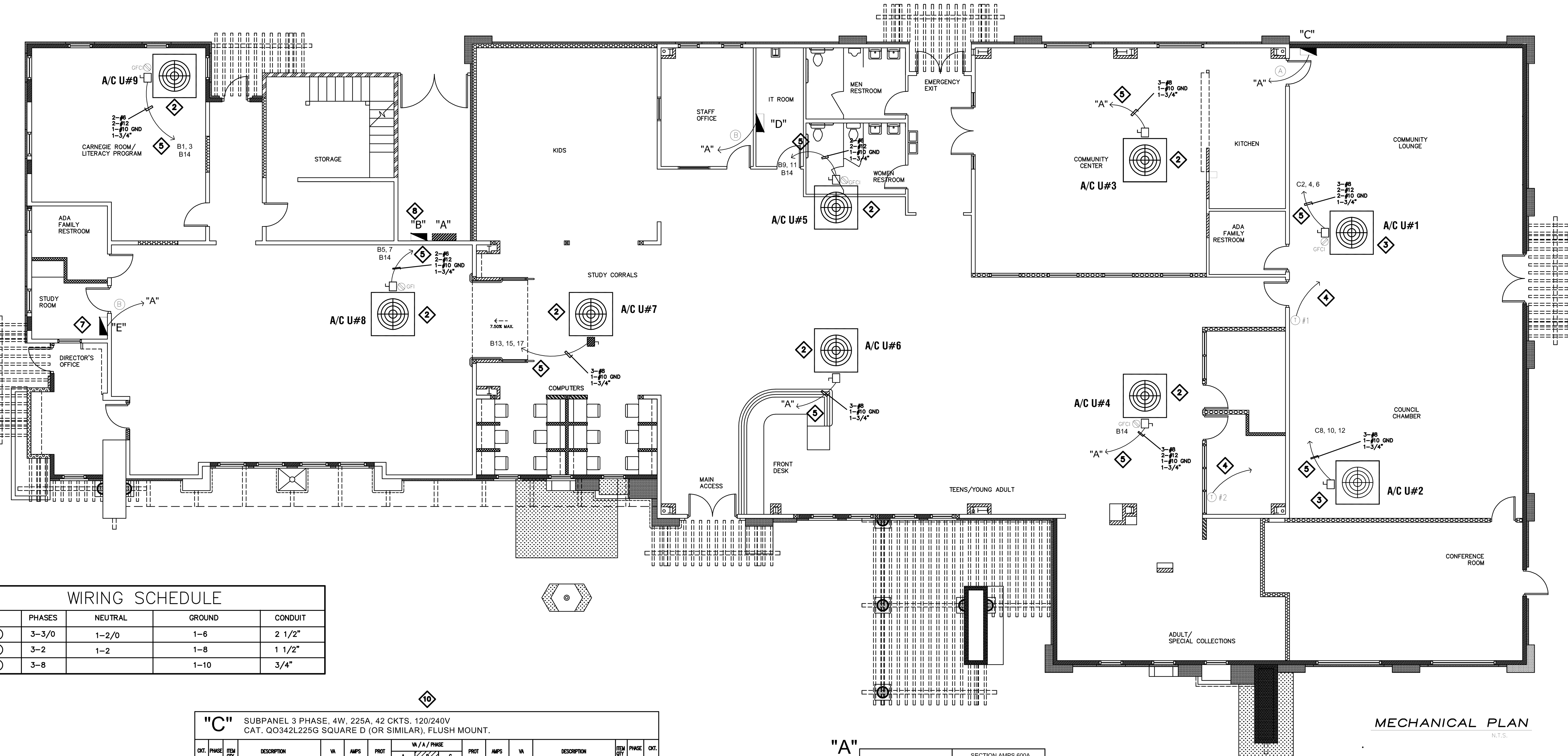

MECHANICAL PLAN

N.T.S.

WIRING SCHEDULE

	PHASES	NEUTRAL	GROUND	CONDUIT
(A)	3–3/0	1–2/0	1–6	2 1/2"
(B)	3–2	1–2	1–8	1 1/2"
(C)	3–8		1–10	3/4"

"B" SUBPANEL 3 PHASE, 4W, 225A, 42 CKTS. 120/240V CAT. QO342L225GRB SQUARE D (OR SIMILAR), SURFACE MOUNT. (10)

CKT.	PHASE	ITEM QTY	DESCRIPTION	VA	AMPS	PROT	A	B	C	PROT	AMPS	VA	DESCRIPTION	ITEM QTY	PHASE	CKT.
1	A	1	A/C UNIT #9 5 TONS	4370	38.0	2P-50	4370 / 38.0			2P-50	–	–	RV CAMP RECEPT. OUTLET	1	A	2
3	B			4370	38.0			4370 / 38.0			–	–			B	4
5	C	1	A/C UNIT #8 5 TONS	4600	40.0	2P-50			4900 / 42.0	1P-20	2.0	300	SPRINKLERS	1	C	6
7	A			4600	40.0		4600 / 40.0			1P-20	–	–	–	1	A	8
9	B	1	A/C UNIT #5 5 TONS	4428	38.5	2P-50		6928 / 59.3		3P-20	20.8	2500	WATER HEATER	1	B	10
11	C			4428	38.5				6928 / 59.3		20.8	2500			C	12
13	A	1	A/C UNIT #7 3 TONS	2520	19.0	3P-30	3240 / 25.0			1P-20	6.0	720	A/C UNITS SERVICE RECEPT. OUTLETS	4	A	14
15	B			2520	19.0			2520 / 19.0							B	16
17	C			2520	19.0				2964 / 22.7	1P-20	3.7	444	EXTERIOR LIGHTS	38	C	18
19	A						547 / 4.6			1P-20	4.6	947	EXTERIOR LIGHTS	23	A	20
21	B														B	22
23	C								540 / 4.5	1P-20	4.5	540	EXTERIOR RECEPT. OUTLET	3	C	24
25	A						720 / 6.0			1P-20	6.0	720	EXTERIOR RECEPT. OUTLET	4	A	26
27	B														B	28
29	C														C	30
			TOTAL VA/PHASE				13477	13818	15332							
			TOTAL AMPERS/PHASE				113.6	116.3	128.5							

"C" SUBPANEL 3 PHASE, 4W, 225A, 42 CKTS. 120/240V CAT. QO342L225G SQUARE D (OR SIMILAR), FLUSH MOUNT. (10)

CKT.	PHASE	ITEM QTY	DESCRIPTION	VA	AMPS	PROT	A	B	C	PROT	AMPS	VA	DESCRIPTION	ITEM QTY	PHASE	CKT.
1	A	2	WATER DISPENSER & SODA MACHINE	1080	9.0	1P-20	4660 / 36.0			3P/40	27.0	3580	A/C EQUIPMENT #1 COMMUNITY LOUNGE	1	A	2
3	B							3580 / 27.0			27.0	3580			B	4
5	C	1	REFRIGERATOR RECEPTACLE OUTLET	780	6.5	1P-20			4360 / 33.5		27.0	3580			C	6
7	A	4	KITCHEN RECEPTACLE OUTLET	720	6.0	1P-20	4300 / 33.0			3P/40	27.0	3580	A/C EQUIPMENT #2 COUNCIL CHAMBER	1	A	8
9	B							3580 / 27.0			27.0	3580			B	10
11	C	1	MICROWAVE OVEN	1500	12.5	1P-20			5080 / 39.5		27.0	3580			C	12
13	A	1	KITCHEN COFFE MAKER	1600	13.5	1P-20	2196 / 18.5			1P-20	5.0	596	STUDY ROOM & ADULT SPECIAL COLLECTIONS LIGHTS	18	A	14
15	B														B	16
17	C	3	COMMUNITY CENTER RECEPTACLE OUTLETS	540	4.5	1P-20			1540 / 13.0	1P-20	8.3	1000	COMMUNITY CENTER LIGHTS	19	C	18
19	A	9	COMMUNITY LOUNGE RECEPTACLE OUTLETS	1620	13.5	1P-20	1330 / 19.4			1P-20	5.9	710	COMMUNITY LOUNGE LIGHTS	24	A	20
21	B														B	22
23	C	10	COMMUNITY LOUNGE RECEPTACLE OUTLETS	1800	15.0	1P-20			2222 / 18.5	1P-20	3.5	422	CONFERENCE ROOM LIGHTS	14	C	24
25	A	8	COMMUNITY LOUNGE RECEPTACLE OUTLETS	1440	12.0	1P-20	3040 / 25.5			1P-20	13.5	1600	CONFERENCE ROOM COFFE MAKER	1	A	26
27	B							4450 / 37.0		2P/50	37.0	4450	STOVE	1	B	28
29	C	6	COUNCIL CHAMBER RECEPTACLE OUTLETS	1080	9.0	1P-20			5530 / 46.0		37.0	4450			C	30
31	A	6	COUNCIL CHAMBER RECEPTACLE OUTLETS	1080	9.0	1P-20	1080 / 9.0								A	32
33	B														B	34
35	C	4	COUNCIL CHAMBER RECEPTACLE OUTLETS	720	6.0	1P-20			720 / 6.0						C	36
37	A	4	CONFERENCE ROOM RECEPTACLE OUTLETS	720	6.0	1P-20	720 / 6.0								A	38
39	B														B	40
41	C	5	CONFERENCE ROOM RECEPTACLE OUTLETS	900	7.5	1P-20			900 / 7.5						C	42
			TOTAL VA/PHASE				17326	11710	20354							
			TOTAL AMPERS/PHASE				147.4	91.0	164.0							

"A"

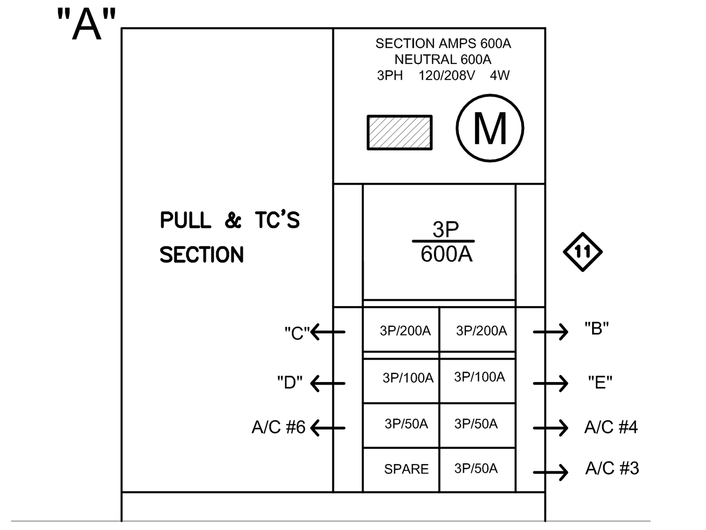

EXISTING MAIN CIRCUIT BRAKER & DISTRIBUTION PANEL

N.T.S.

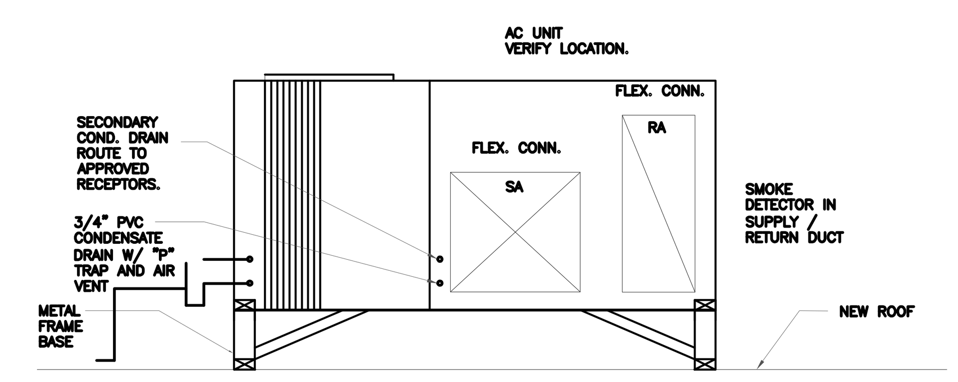

AC MOUNTING DETAIL

N.T.S.

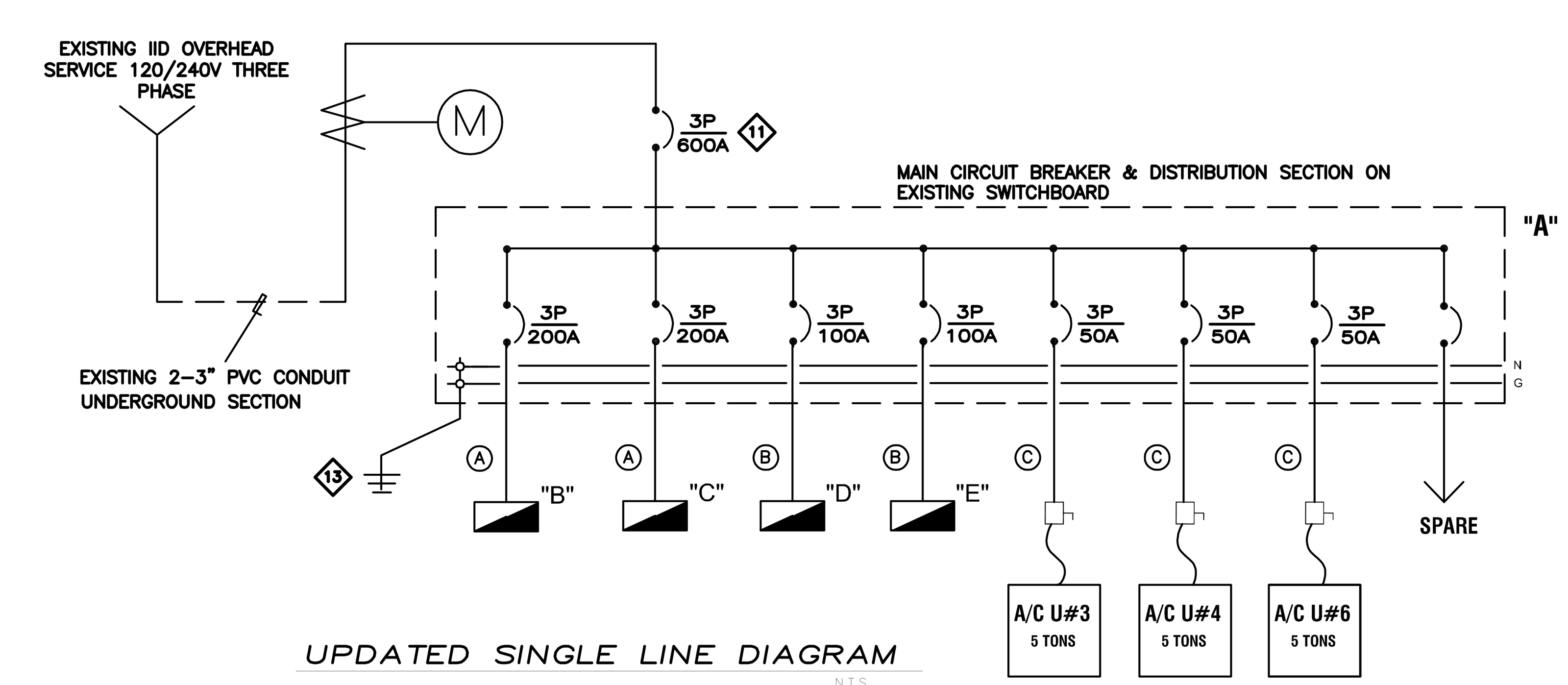

UPDATED SINGLE LINE DIAGRAM

N.T.S.

A/C UNITS ELECTRICAL INFORMATION

UNIT	MAKE	MODEL	DESCRIPTION	CAPACITY	VOLTS/PHASE/HZ	MINIMUM CIRCUIT AMPACITY	MAXIMUM BRANCH CIRCUIT PROTECTION	BRANCH CIRCUIT CONDUCTOR SIZE EMT SIZE
A/C U#1	DAY & NIGHT	RHH060*0XA0AAA	ROOF MOUNTED UNIT	5 TON.	208–230/3/60	30.2	45	3–#8, 1–#10 GROUND 1–3/4"
A/C U#2	DAY & NIGHT	RHH060*0XA0AAA	ROOF MOUNTED UNIT	5 TON.	208–230/3/60	30.2	45	3–#8, 1–#10 GROUND 1–3/4"
A/C U#3	RHEEM	RJMA-A060CL	ROOF MOUNTED UNIT	5 TON.	208–230/3/60	32.0	50	3–#8, 1–#10 GROUND 1–3/4"
A/C U#4	RHEEM	RJMA-A060CL	ROOF MOUNTED UNIT	5 TON.	208–230/3/60	32.0	50	3–#8, 1–#10 GROUND 1–3/4"
A/C U#5		B1HO060A06A	ROOF MOUNTED UNIT	5 TON.	208–230/1/60	44.8	60	2–#6, 1–#10 GROUND 1–3/4"
A/C U#6	RHEEM	RJMA-A060CL	ROOF MOUNTED UNIT	5 TON.	208–230/3/60	32.0	50	3–#8, 1–#10 GROUND 1–3/4"
A/C U#7	RHEEM	RJMA-A036CM	ROOF MOUNTED UNIT	3 TON.	208–230/3/60	22.0	30	3–#8, 1–#10 GROUND 1–3/4"
A/C U#8	RHEEM	RJMA-A060JL	ROOF MOUNTED UNIT	5 TON.	208–230/1/60	49.0	60	2–#6, 1–#10 GROUND 1–3/4"
A/C U#9	ARI	RQPMA060JK	ROOF MOUNTED UNIT	5 TON.	208–230/1/60	41.0	60	2–#6, 1–#10 GROUND 1–3/4"

ELECTRICAL NOTES

1. ALL WORK TO BE DONE ACCORDING WITH CALIFORNIA ELECTRICAL CODE 2013 EDITION.
2. EXISTING A/C UNITS, MOUNTED ON ROOF
3. NEW A/C UNITS, MOUNTED ON ROOF
4. RUN ONE 1/2" EMT CONDUIT FOR THE THERMOSTATS
5. EMT CONDUIT, RUN UNDER THE ROOF INSIDE THE BUILDING
6. EXTERIOR LIGHT FIXTURE CONTROL CIRCUIT B18 – TIMER CIRCUIT B20 – PHOTOCELL & RELAY INSTALL THE TIMER & THE LIGHTING RELAY IN AN ENCLOSURE NEXT TO THE SUBPANEL "B"
7. REPLACE TWO EXISTING SUBPANELS IN STUDY ROOM AREA, FOR A NEW SUBPANEL OF 42 CKTS. THREE PHASE, 120–240V, 225A, CAT. QO342L225G SQUARE D (OR SIMILAR)
8. REPLACE THE EXISTING SUBPANEL ("B") FOR A NEW SUBPANEL OF 42 CKTS. THREE PHASE, 120–240V, 225A CAT. QO342L225GRB SQUARE D (OR SIMILAR)
9. MOVE WIRING FOR THE EXISTING KITCHEN APPLIANCES FROM THE EXISTING SUBPANEL "D" TO THE NEW SUBPANEL "C"
10. PHASE B IS THE HIGH LEG. AND SHALL BE DURABLY AND PERMANENTLY MARKED BY AN OUTER FINISH THAT IS ORANGE IN COLOR, OR BY OTHER EFFECTIVE MEANS.
11. CHANGE THE RATING PLUG IN THE EXISTING MAIN CIRCUIT BREAKER, TO UPGRADE IT, FROM 3P–400A TO 3P–600A. MAIN CIRCUIT BREAKER FRAME CATALOG NUMBER SGHA36AT0600, GE. NEW RATING PLUG CATALOG NUMBER SRPG600A600, GE
12. CONNECT TO THE GENERAL LIGHTING AREA CIRCUITS THE CORRIDOR LIGHTS (2), EXIT SIGNS (2) & OUTDOOR EGRESS LIGHT
13. VERIFY THE RESISTANCE TO GROUND IT IS NOT MORE THAN 25 OHMS ANYTIME, USE SUPLEMENTAL ELECTRODES (METAL WATER PIPE, CONCRETE–ENCASED ELECTRODE OR METAL FRAME OF BUILDING) TO REDUCE RESISTENCE TO GROUND.

City of Imperial California

REVISIONS			
NO.	DESCRIPTION:	DATE:	BY:
△			
△			
△			

BY:

DATE:

XXXXXX

R.C.E. NO. XXXXX

SEAL: REGISTERED PROFESSIONAL ENGINEER JOSE LUIS REYES LEMUS E 15446 ELECTRICAL STATE OF CALIFORNIA

E03

LIBRARY EXPANSION PROJECT

MECHANICAL PLAN

IN THE CITY OF IMPERIAL, CALIFORNIA — DATE: 05/13/15

SHEET: 3 OF: 4

DWN. BY: L.A.R.

REV. BY: R.L.

APP. BY: R.L.

ELECTRICAL SYMBOLS LEGEND

	SUBPANEL
	2'x4' FT, LIGHT FIXTURE 4-F32T8 LAMPS, ELECTRONIC BALLAST 120V RECESSED MOUNT
EL	2'x4' FT, LIGHT FIXTURE 4-F32T8 LAMPS, ELECTRONIC BALLAST 120V RECESSED MOUNT W/BATTERY BACK UP
	CR24, 2'x4' FT, ARCHITECTURAL LED TRAFFER, WITH CREE SMARTCAST TECHNOLOGY 40W, 120V RECESSED MOUNT CREE OR SIMILAR
EL	CR24, 2'x4' FT, ARCHITECTURAL LED TRAFFER, WITH CREE SMARTCAST TECHNOLOGY 40W, 120V RECESSED MOUNT W/BATTERY BACK UP CREE OR SIMILAR
	CR24, 2'x4' FT, ARCHITECTURAL LED TRAFFER, WITH CREE SMARTCAST TECHNOLOGY 40W, 120V SURFACE MOUNT CREE OR SIMILAR
	CR22, 2'x2' FT, ARCHITECTURAL LED TROFFER, WITH CREE SMARTCAST TECHNOLOGY 32W, 120V RECESSED MOUNT CREE OR SIMILAR
EL	CR22, 2'x2' FT, ARCHITECTURAL LED TROFFER, WITH CREE SMARTCAST TECHNOLOGY 32W, 120V RECESSED MOUNT W/BATTERY BACKUP CREE OR SIMILAR
	CR22, 2'x2' FT, ARCHITECTURAL LED TROFFER, WITH CREE SMARTCAST TECHNOLOGY 32W, 120V SURFACE MOUNT CREE OR SIMILAR
	LED WALL MOUNT LIGHT FIXTURE 42W, 120V CREE OR SIMILAR
	WALL SCONCE LIGHT FIXTURE, 1-13DTT CFL, ELECTRONIC BALLAST, 120V LITHONIA LIGHTING OR SIMILAR
	CFL DOWNLIGHTING FIXTURE, 1-13DTT CFL, ELECTRONIC BALLAST, 120V LITHONIA LIGHTING OR SIMILAR
	LED DOWNLIGHT FIXTURE 10W, 120V HOUSING 4" CREE OR SIMILAR
	FLOOR SPOT CAT. PDX7 B 12LED CLW MVOLT SP FLCAS 345 LP1 LITHONIA LIGHTING OR SIMILAR
	GARDEN FIXTURE/REFLECTOR CAT. TL40120LV S F DB W BRONZELITE OR SIMILAR
	OUTDOOR EGRESS EMERGENCY LIGHT 20W,
RPS	REMOTE POWER SUPPLY INPUT 120/277 VCA, OUTPUT 5-24V
EXIT	WALL MOUNTED EXIT LIGHT/SIGN W/ BATTERY BACK-UP
	SINGLE RECEPTACLE OUTLET, 50A, 240V
	DUPLEX RECEPTACLE OUTLET, 20A, 120V
GFCI	DUPLEX RECEPTACLE OUTLET, 20A, 120V WITH GROUND FAULT CIRCUIT INTERRUPTER (GFCI)
	TWO DUPLEX RECEPTACLE OUTLET, 20A, 120V
J	JUNCTION-BOX
	MAIN CIRCUIT BREAKER & DISTRIBUTION PANEL
M	METER SOCKET
	GROUNDING ELECTRODE
T	THERMOSTAT
COMM	CONDUIT/PREPARATION
	TV/CABLE/DATA OUTLET
	MICROPHONE OUTLET
	VOICE & DATA JACK
	PROJECTOR
	EMT CONDUIT
	PVC SCH 40 CONDUIT INSTALLED UNDERGROUND
	SAFETY SWITCH 3P-60A, 240 V, NEMA 3R
	SAFETY SWITCH 3P-30A, 240 V, NEMA 3R
	SAFETY SWITCH 2P-30A, 240 V, NEMA 3R
	EMT CONDUIT AND WIRE HOME RUN TO DESIGNATED CIRCUIT
S	SINGLE POLE SWITCH, 15A, 120V
S	DOUBLE POLE SWITCH, 15A, 120V
	VENTILATION FAN 80 CFM, 0.3 SONES, 0.4A. 120 V. CAT. QTXE080, BROAN OR SIMILAR

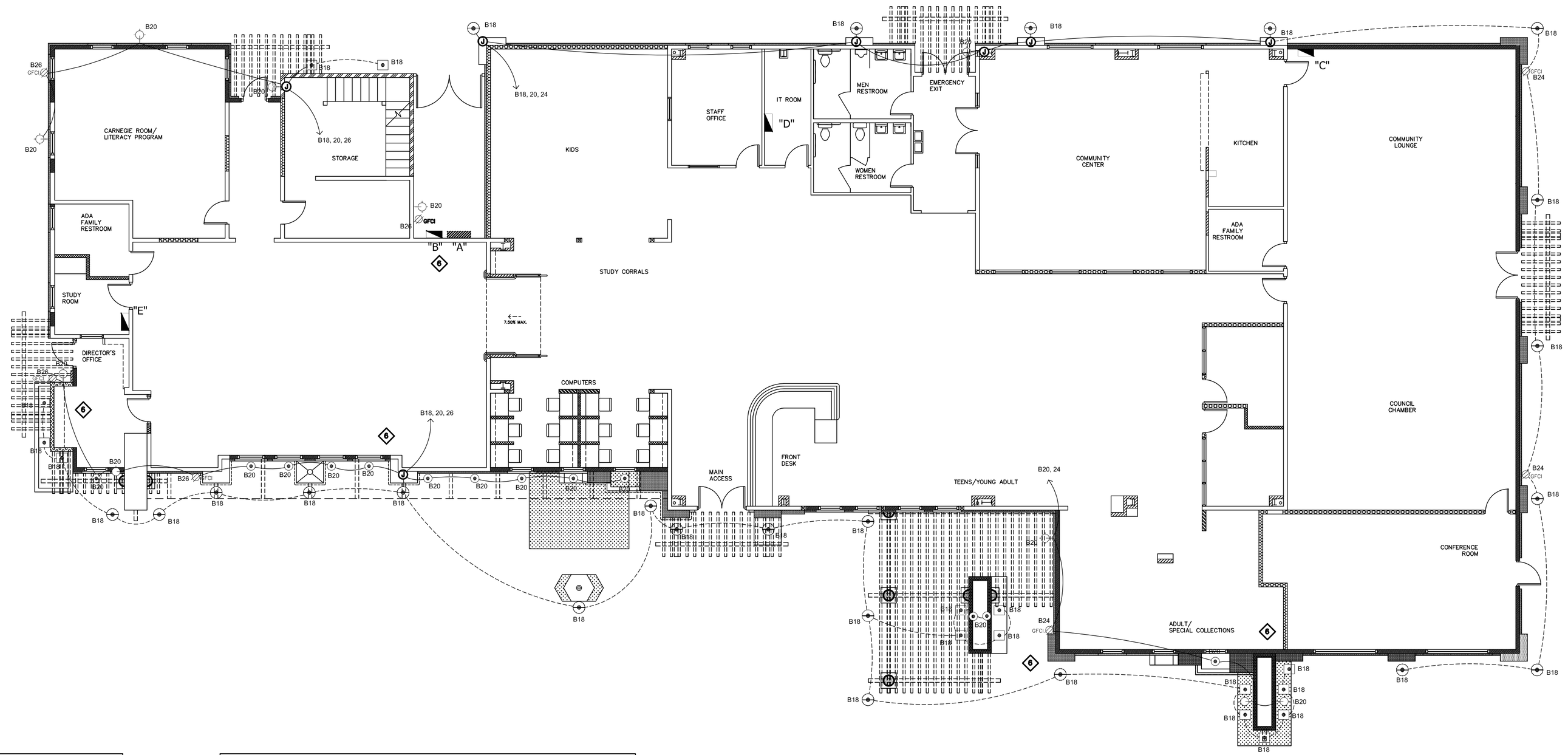

"B" SUBPANEL 3 PHASE, 4W, 225A, 42 CKTS. 120/240V
CAT. QO342L225GRB SQUARE D (OR SIMILAR), SURFACE MOUNT.

CKT.	PHASE	ITEM QTY	DESCRIPTION	VA	AMPS	PROT	VA / A / PHASE A	B	C	PROT	AMPS	VA	DESCRIPTION	ITEM QTY	PHASE	CKT.
1	A	1	A/C UNIT #9 5 TONS	4370	38.0	2P-50	4370 38.0			2P-50	-	-	RV CAMP RECEPT. OUTLET	1	A	2
3	B			4370	38.0			4370 38.0			-	-			B	4
5	C	1	A/C UNIT #8 5 TONS	4600	40.0	2P-50			4800 41.6	1P-20	2.0	300	SPRINKLERS	1	C	6
7	A			4600	40.0		4600 40.0			1P-20	-	-	-	-	A	8
9	B	1	A/C UNIT #5 5 TONS	4428	38.5	2P-50		6928 59.5		3P-20	20.8	2500	WATER HEATER	1	B	10
11	C			4428	38.5				6928 59.5		20.8	2500			C	12
13	A	1	A/C UNIT #7 3 TONS	2520	19.0	3P-30	3240 28.0			1P-20	6.0	720	A/C UNITS SERVICE RECEPT. OUTLETS	4	A	14
15	B			2520	19.0			2520 19.0							B	16
17	C			2520	19.0				2664 22.2	1P-20	3.7	444	EXTERIOR LIGHTS	38	C	18
19	A						547 4.6			1P-20	4.6	947	EXTERIOR LIGHTS	23	A	20
21	B														B	22
23	C								540 4.5	1P-20	4.5	540	EXTERIOR RECEPT. OUTLET	3	C	24
25	A						720 6.0			1P-20	6.0	720	EXTERIOR RECEPT. OUTLET	4	A	26
27	B														B	28
29	C														C	30
TOTAL VA/PHASE							13477	13818	15332							
TOTAL AMPERS/PHASE							113.6	116.3	128.5							

LUMINAIRE SCHEDULE

SYMBOL	QTY	CATALOG NUMBER	DESCRIPTION	LAMP	LUMENS	WATTS/ EACH	VOLTS	BALLAST	MANUFACTURER
	63	EXISTING	RECESSED 2'x4' FT LIGHT FIXTURE	4-F32T8	4x2800	128	120	ELECTRONIC	EXISTING
EL	5	2GTB432A19 MVOLT GEB101IS EL	RECESSED 2'x4' FT LIGHT FIXTURE W/BATTERY BACKUP	4-F32T8	4x2800	128	120	ELECTRONIC	LITHONIA LIGHTING OR SIMILAR
	42	CR24 4OL 40KS	RECESSED 2'x4' FT ARCHITECTURAL LED TROFFER	LED	4000	40	120	ELECTRONIC	CREE OR SIMILAR
EL	3	CR24 4OL 40KS EB14	RECESSED 2'x4' FT ARCHITECTURAL LED TROFFER W/ BATTERY BACK UP	LED	4000	40	120	ELECTRONIC	CREE OR SIMILAR
	6	CR24 4OL 40KS	SURFACE MOUNT 2'x4' FT ARCHITECTURAL LED TROFFER	LED	4000	40	120	ELECTRONIC	CREE OR SIMILAR
	23	CR22 32L40KS	RECESSED 2'x2' FT ARCHITECTURAL LED TROFFER	LED	3200	32	120	ELECTRONIC	CREE OR SIMILAR
EL	1	CR22 32L40KS EB14	RECESSED 2'x2' FT ARCHITECTURAL LED TROFFER W/ BATTERY BACK UP	LED	3200	32	120	ELECTRONIC	CREE OR SIMILAR
	4	CR2232L35KCMA	SURFACE MOUNT 2'x2' FT ARCHITECTURAL LED TROFFER	LED	3200	32	120	ELECTRONIC	CREE OR SIMILAR
	9	XSPW A02 FC 12P	EXTERIOR WALL MOUNT LIGHT FIXTURE	LED	2814	42	120	ELECTRONIC	CREE OR SIMILAR
	2	AVSPI 13DTT MDM 120	WALL SCONCE LIGHT FIXTURE	13DTT	735	13	120	ELECTRONIC	LITHONIA LIGHTING OR SIMILAR
	13	AFV 13DTT 4 MB LD CUL 120	CFL DOWNLIGHTING FIXTURE	13DTT	735	13	120	ELECTRONIC	LITHONIA LIGHTING OR SIMILAR
	16	KR 4OL 27K 120 +4DWT	LED DOWNLIGHTING FIXTURE	LED	660	10	120	ELECTRONIC	CREE OR SIMILAR
	23	PDX7 B 12LED CLW MVOLT SP FLCAS 345 LP1	FLOOR SPOT LUMINAIRE	LED	780	12	120	ELECTRONIC	LITHONIA LIGHTING OR SIMILAR
	14	TL40120LV S F DB W	GARDEN FIXTURE/ REFLECTOR	LED	780	12	120	ELECTRONIC	BRONZELITE OR SIMILAR
EXIT	7	LHQMSWSRN	WALL MOUNTED EXIT LIGHT/SIGN W/ BATTERY BACK-UP	LED	90	32	120	ELECTRONIC	LITHONIA LIGHTING OR SIMILAR
	4	MUEBB20BTDG	OUTDOOR EGRESS EMERGENCY LIGHT	LED	1300	20	120	ELECTRONIC	RIGHTED RIR LIGHTING OR SIMILAR

ELECTRICAL NOTES

1. ALL WORK TO BE DONE ACCORDING WITH CALIFORNIA ELECTRICAL CODE 2013 EDITION.
2. EXISTING A/C UNITS, MOUNTED ON ROOF
3. NEW A/C UNITS, MOUNTED ON ROOF
4. RUN ONE 1/2" EMT CONDUIT FOR THE THERMOSTATS
5. EMT CONDUIT, RUN UNDER THE ROOF INSIDE THE BUILDING
6. EXTERIOR LIGHT FIXTURE CONTROL
   CIRCUIT B18 – TIMER
   CIRCUIT B20 – PHOTOCELL & RELAY
   INSTALL THE TIMER & THE LIGHTING RELAY IN AN ENCLOSURE NEXT TO THE SUBPANEL "B"
7. REPLACE TWO EXISTING SUBPANELS IN STUDY ROOM AREA, FOR A NEW SUBPANEL OF 42 CKTS. THREE PHASE, 120-240V, 225A, CAT. QO342L225G SQUARE D (OR SIMILAR)
8. REPLACE THE EXISTING SUBPANEL ("B") FOR A NEW SUBPANEL OF 42 CKTS. THREE PHASE, 120-240V, 225A CAT. QO342L225GRB SQUARE D (OR SIMILAR)
9. MOVE WIRING FOR THE EXISTING KITCHEN APPLIANCES FROM THE EXISTING SUBPANEL "D" TO THE NEW SUBPANEL "C"
10. PHASE B IS THE HIGH LEG. AND SHALL BE DURABLY AND PERMANENTLY MARKED BY AN OUTER FINISH THAT IS ORANGE IN COLOR, OR BY OTHER EFFECTIVE MEANS.
11. CHANGE THE RATING PLUG IN THE EXISTING MAIN CIRCUIT BREAKER, TO UPGRADE IT, FROM 3P-400A TO 3P-600A. MAIN CIRCUIT BREAKER FRAME CATALOG NUMBER SGHA36AT0600, GE. NEW RATING PLUG CATALOG NUMBER SRPG600A600, GE
12. CONNECT TO THE GENERAL LIGHTING AREA CIRCUITS THE CORRIDOR LIGHTS (2), EXIT SIGNS (2) & OUTDOOR EGRESS LIGHT
13. VERIFY THE RESISTANCE TO GROUND IT IS NOT MORE THAN 25 OHMS ANYTIME, USE SUPLEMENTAL ELECTRODES (METAL WATER PIPE, CONCRETE-ENCASED ELECTRODE OR METAL FRAME OF BUILDING) TO REDUCE RESISTENCE TO GROUND.

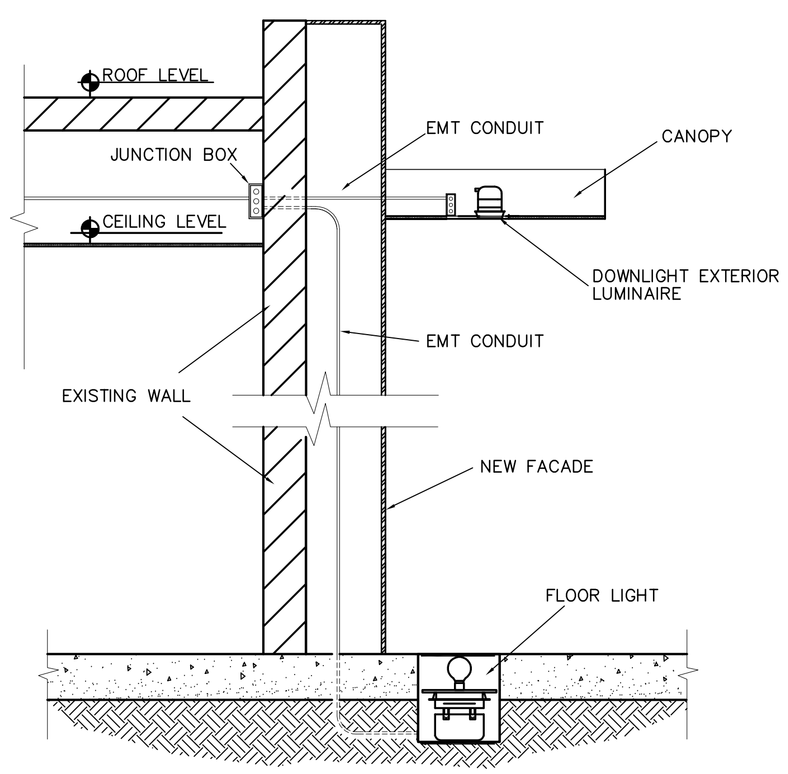

FLOOR & CANOPY LIGHTS DETAIL
N.T.S.

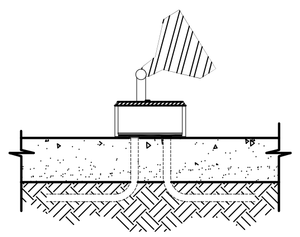

GARDEN LIGHT FIXTURE/ REFLECTOR DETAIL N.T.S.

SHEET: 4 OF: 4
DWN. BY: L.A.R.
REV. BY: R.L.
APP. BY: R.L.

LIBRARY EXPANSION PROJECT
EXTERIOR LIGHTING PLAN
IN THE CITY OF IMPERIAL, CALIFORNIA
DATE: 05/13/15

E04

REGISTERED PROFESSIONAL ENGINEER
JESUS LUIS REYES CANO
NO. E 15446
ELECTRICAL
STATE OF CALIFORNIA
SEAL:

BY:
DATE:
XXXXXX
R.C.E. NO. XXXXX

REVISIONS

NO.	DESCRIPTION:	DATE:	BY:
△			
△			
△			

City of Imperial California

BUILDING ENERGY ANALYSIS REPORT

PROJECT:

Public Library Expansion
200 W. 9th Street
Imperial, CA 92251

Project Designer:

Vexer Engineering
653 W. Main Street Ste 103
El Centro, CA 92243
760-352-8100

Report Prepared by:

Guillermo Garcia
GMG Graphics
P.O. Box 1560
El Centro, CA 92244
760-791-1961

Job Number:

J15010

Date:

5/8/2015

The EnergyPro computer program has been used to perform the calculations summarized in this compliance report. This program has approval and is authorized by the California Energy Commission for use with both the Residential and Nonresidential 2013 Building Energy Efficiency Standards.

This program developed by EnergySoft, LLC – www.energysoft.com.

TABLE OF CONTENTS

Cover Page	1
Table of Contents	2
Nonresidential Performance Title 24 Forms	3
Form ENV-MM Envelope Mandatory Measures	24
HVAC System Heating and Cooling Loads Summary	25
Zone Load Summary	27

PERFORMANCE CERTIFICATE OF COMPLIANCE (Part 1 of 3) PERF-1C

Project Name			Date
Public Library Expansion			*5/8/2015*
Project Address	**Climate Zone**	**Total Cond. Floor Area**	**Addition Floor Area**
200 W. 9th Street Imperial	*CA Climate Zone 15*	*11,295*	*4,024*

GENERAL INFORMATION

Building Type:	☑ Nonresidential	☐ High-Rise Residential	☐ Hotel/Motel Guest Room
	☐ Relocatable - indicate	☐ specific climate zone	☐ all climates
Phase of Construction:	☐ New Construction	☐ Addition	☑ Alteration

STATEMENT OF COMPLIANCE

This certificate of compliance lists the building features and specifications needed to comply with Title 24, Parts 1 and 6 of the California Code of Regulations. This certificate applies only to a Building using the performance compliance approach.

The documentation author hereby certifies that the documentation is accurate and complete.

Documentation Author

Name	*Guillermo Garcia*	Signature	Guillermo Garcia
Company	*GMG Graphics*	Date	*5/8/2015*
Address	*P.O. Box 1560*	Phone	*760-791-1961*
City/State/Zip	*El Centro, CA 92244*		

The Principal Designer hereby certifies that the proposed building design represented in this set of construction documents is consistent with the other compliance forms and worksheets, with the specifications, and with any other calculations submitted with this permit application. The proposed building has been designed to meet the energy efficiency requirements contained in sections 110.0, 116.0 through 118.0, and 140.0 through 149.0 of Title 24, Part 6.

Please check one:

ENV.	LTG.	MECH.	
☐	☐	☐	I hereby affirm that I am eligible under the provisions of Division 3 of the Business and Professions Code to sign this document as the person responsible for its preparation; and that I am licensed in the State of California as a civil engineer, mechanical engineer, electrical engineer, or I am a licensed architect.
☐	☐	☐	I affirm that I am eligible under the provisions of Division 3 of the Business and Professions Code by section 5537.2 or 6737.3 to sign this document as the person responsible for its preparation; and that I am a licensed contractor performing this work.
☐	☐	☐	I affirm that I am eligible under Division 3 of the Business and Professions Code to sign this document because it pertains to a structure or type of work described as exempt pursuant to Business and Professions Code Sections 5537, 5538 and 6737.1.

Principal Envelope Designer

Name		Signature	
Company	*Vexer Engineering*	Date	
Address	*653 W. Main Street Ste 103*	License #	
City/State/Zip	*El Centro, CA 92243*	Phone	*760-352-8100*

Principal Mechanical Designer

Name		Signature	
Company	*City of Imperial*	Date	
Address	*420 S. Imperial Ave.*	License #	
City/State/Zip	*Imperial, CA 92251*	Phone	

Principal Lighting Designer

Name	*Jose Luis Reyes Lemus*	Signature	
Company		Date	
Address	*P.O. Box 9015-930*	License #	
City/State/Zip	*Calexico, CA 92231*	Phone	*0115126862713074*

INSTRUCTIONS TO APPLICANT COMPLIANCE & WORKSHEETS (check box if worksheets are included)

☑	ENV-01	Certificate of Compliance. Required on plans.	☑	MCH-01	Certificate of Compliance. Required on plans.
☑	LTI-01	Certificate of Compliance. Required on plans.	☑	MCH-02	HVAC Air/Water Side Requirements.
☑	LTI-02	Lighting Controls Credit Worksheet.	☑	MCH-03	Mechanical Ventilation and Reheat.
☐	LTI-03	Indoor Lighting Power Allowance.	☑	MCH-08	Mechanical Equipment Details.

PERFORMANCE CERTIFICATE OF COMPLIANCE (Part 2 of 3) PERF-1C

Project Name: *Public Library Expansion*

Date: *5/8/2015*

ANNUAL TDV ENERGY USE SUMMARY (kBtu/sqft-yr)

Energy Component	Standard Design	Proposed Design	Compliance Margin
Space Heating	11.25	5.89	5.36
Space Cooling	308.42	239.35	69.08
Indoor Fans	33.84	109.87	-76.03
Heat Rejection	0.00	0.00	0.00
Pumps & Misc.	0.00	0.00	0.00
Domestic Hot Water	9.47	9.47	0.00
Lighting	78.14	55.98	22.16
Receptacle	100.88	100.88	0.00
Process	0.00	0.00	0.00
Process Lighting	0.00	0.00	0.00
TOTALS	542.01	521.44	20.57
Percent better than Standard		3.8 %	(3.8 % excluding process)

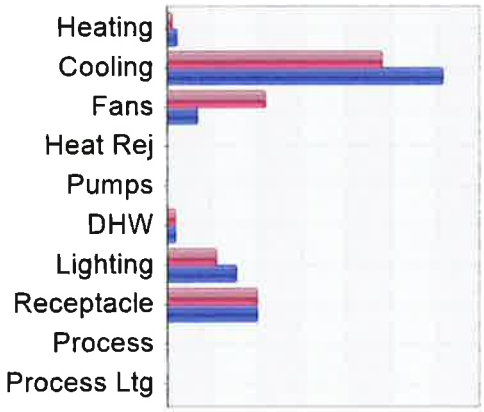

BUILDING COMPLIES

GENERAL INFORMATION

Building Orientation	(N) 0 deg	Conditioned Floor Area	11,295	sqft.
Number of Stories	1	Unconditioned Floor Area	0	sqft.
Number of Systems	9	Conditioned Footprint Area	11,295	sqft.
Number of Zones	6	Natural Gas Available On Site	Yes	

	Orientation	Gross Area		Glazing Area		Glazing Ratio
Front Elevation	(N)	1,928	sqft.	288	sqft.	14.9 %
Left Elevation	(E)	1,015	sqft.	59	sqft.	5.8 %
Rear Elevation	(S)	1,927	sqft.	165	sqft.	8.5 %
Right Elevation	(W)	1,068	sqft.	42	sqft.	3.9 %
Total		5,938	sqft.	553	sqft.	9.3 %
Roof		11,295	sqft.	0	sqft.	0.0 %

	Standard		Proposed		
Prescriptive Lighting Power Density	1.241	W/sqft.	0.958	W/sqft.	Prescriptive Values for Comparison only. See LTI-01 for allowed LPD.

Remarks:

PERFORMANCE CERTIFICATE OF COMPLIANCE (Part 3 of 3) PERF-1C

Project Name
Public Library Expansion

Date
5/8/2015

ZONE INFORMATION

System Name	Zone Name	Occupancy Type	Floor Area (sqft.)	Inst. LPD (W/sf)[1]	Ctrl. Credits (W/sf)[2]	Allowed LPD Area (W/sf)[3]	Allowed LPD Tailored (W/sf)[4]	Proc. Loads (W/sf)
Existing System	*Existing Library Zone 6*	*Library, Reading Area*	*7,271*	**1.200*				
	Carnegie Room Zone 1	*Library, Reading Area*	*158*	*1.776*	*0.444*			
	Director's Office Zone 2	*Office <= 250 sqft*	*144*	*1.997*	*0.499*			
	Computer Zone 3	*Computer Room*	*231*	*0.694*	*0.173*			
	Kids Zone 5	*Library, Reading Area*	*582*	*0.618*	*0.155*			
New System	*Conference/Chamber Zone*	*Convention/Conference/Mee*	*2,909*	*0.589*	*0.147*			

Notes: 1. See LTI-01 (items marked with asterisk, see LTI-01 by others) 2. See LTI-02 3. See LTI-03 (by others) 4. See LTI-04

Items above require special documentation

EXCEPTIONAL CONDITIONS COMPLIANCE CHECKLIST

The local enforcement agency should pay special attention to the items specified in this checklist. These items require special written justification and documentation, and special verification to be used with the performance approach. The local enforcement agency determines the adequacy of the justifications, and may reject a building or design that otherwise complies based on the adequacy of the special justification and documentation submitted.

The HVAC System Existing System incorporates HERS verified Duct Leakage. Target leakage is calculated and documented on the MECH-4-A.

The HVAC System New System incorporates HERS verified Duct Leakage. Target leakage is calculated and documented on the MECH-4-A.

The exceptional features listed in this performance approach application have specifically been reviewed. Adequate written justification and documentation for their use have been provided by the applicant.

Authorized Signature or Stamp _____

STATE OF CALIFORNIA

ENVELOPE COMPONENT APPROACH

CEC-NRCC-ENV-01-E (Revised 06/14)

CALIFORNIA ENERGY COMMISSION

CERTIFICATE OF COMPLIANCE	NRCC-ENV-01-E
Envelope Component Approach	(Page 1 of 4)
Project Name: Public Library Expansion	Date Prepared: 5/8/2015

A. GENERAL INFORMATION

1	**Project Location:**	200 W. 9th Street	6	**Compliance Method:**	☑ Component ☐ Unconditioned (file Affidavit)
2	**CA City and Zip Code:**	Imperial, 92251	7	**Building Front Orientation (deg or cardinal):**	0 deg
3	**Climate Zone:**	15	8	**Permitted Scope of Work**	☐ New Construction ☐ Addition ☑ Alteration
4	**Total Conditioned Floor Area:**	11,295	9	**Building Type(s)**	☑ Nonresidential ☐ High-Rise Residential ☐ Hotel/Motel Guest Room
5	☐ Schools (Public School) ☐ Relocatable Public School Bldg. ☑ Conditioned Spaces ☐ Unconditioned Spaces ☐ Skylight Area for Large Enclosed Space > 5000 ft^2 (If checked include the NRCC-ENV-04-E with submittal)				

B. ENVELOPE DETAILS – Framed

1	2	3	4	5	6	7	8	9	10	11
Tag/ID	Assembly Type	Frame Material	Frame Depth	Frame Spacing	Appendix JA4 Reference	Cavity R-value	Continuous Insulation R-value	Proposed U-Factor	Required U-Factor From Tables, B, C, D	Comments
1	Roof	Wood	Suspende		4.2.8-A8	30	0.0	0.102		Existing Metal R-30 Roo
2	Wall	Wood	2x4 @ 16		4.3.1-A3	13	18.0	0.036		R-13 Wall
3	Wall	Metal	2x4 @ 16		4.3.3-A5	15	18.0	0.044		R-19 Wall Metal Stud

C. ENVELOPE DETAILS – Non-framed

1	2	3	4	5	6	7	8	9	10
Tag/ID	Assembly Type	Assembly Materials	Thickness (inches)	Interior or Core Insulation R-value	Continuous Insulation R-value	Appendix JA4 Reference	Proposed U-Factor	Required U-Factor from Tables, B, C, D	Comments
1	Door	Wood, 1-3/4 in.		0	0.0	4.5.1-A4	0.500		Wood Door

D. ENVELOPE DETAILS – Mass

1	2	3	4	5	6	7	8	9	10	11
Tag/ID	Mass Type	Density (lb/ft^3)	Mass Thickness (inches)	Furring Strip Thickness (inches)	Interior Insulation R-value	Exterior Insulation R-value	Appendix JA4 Reference	Proposed Insulation U-factor	Required U-Factor from Tables, B, C, D	Comments

ENVELOPE COMPONENT APPROACH

Project Name: Public Library Expansion

Date Prepared: 5/8/2015

A. GENERAL INFORMATION

1	**Project Location:**	200 W. 9th Street	6	**Compliance Method:**	☑ Component ☐ Unconditioned (file Affidavit)
2	**CA City and Zip Code:**	Imperial, 92251	7	**Building Front Orientation (deg or cardinal):**	0 deg
3	**Climate Zone:**	15	8	**Permitted Scope of Work**	☐ New Construction ☐ Addition ☑ Alteration
4	**Total Conditioned Floor Area:**	11,295	9	**Building Type(s)**	☑ Nonresidential ☐ High-Rise Residential ☐ Hotel/Motel Guest Room
5	☐ Schools (Public School) ☐ Relocatable Public School Bldg. ☑ Conditioned Spaces ☐ Unconditioned Spaces ☐ Skylight Area for Large Enclosed Space > 5000 ft^2 (If checked include the NRCC-ENV-04-E with submittal)				

B. ENVELOPE DETAILS – Framed

1	2	3	4	5	6	7	8	9	10	11
Tag/ID	Assembly Type	Frame Material	Frame Depth	Frame Spacing	Appendix JA4 Reference	Cavity R-value	Continuous Insulation R-value	Proposed U-Factor	Required U-Factor From Tables, B, C, D	Comments
4	Wall	Metal	2x4 @ 16		4.3.3-A5	15	18.0	0.044		R-19 Wall Metal Stud
5	Roof	Wood	2x4 @ 24		4.2.1-A20	30	0.0	0.031		R-30 Roof Attic
6	Wall	Wood	2x4 @ 16		4.3.1-A3	13	18.0	0.036		R-13 Wall

C. ENVELOPE DETAILS – Non-framed

1	2	3	4	5	6	7	8	9	10
Tag/ID	Assembly Type	Assembly Materials	Thickness (inches)	Interior or Core Insulation R-value	Continuous Insulation R-value	Appendix JA4 Reference	Proposed U-Factor	Required U-Factor from Tables, B, C, D	Comments

D. ENVELOPE DETAILS – Mass

1	2	3	4	5	6	7	8	9	10	11
Tag/ID	Mass Type	Density (lb/ft^3)	Mass Thickness (inches)	Furring Strip Thickness (inches)	Interior Insulation R-value	Exterior Insulation R-value	Appendix JA4 Reference	Proposed Insulation U-factor	Required U-Factor from Tables, B, C, D	Comments

CERTIFICATE OF COMPLIANCE
Envelope Component Approach
Project Name: Public Library Expansion
Date Prepared: 5/8/2015

E. ROOFING PRODUCTS (COOL ROOF)

1	2	3	4	5	6	7	8	9	10	11
				Proposed			Minimum Required			
Mass Roof 25 lb ft2 or greater	Roof Pitch	CRRC Product ID Number	Product Type	Aged Solar Reflectance	Thermal Emittance	SRI[2] (Optional)	Aged Solar Reflectance	Thermal Emittance	SRI (optional)	Comments
☐				☐[1]						
☐				☐[1]						
☐				☐[1]						

☐ An aged solar reflectance less than 0.63 is allowed provided the maximum roof / ceiling U-factor in TABLE 140.3 is not exceeded

☐ High-rise residential buildings and Hotels and Motels with low-sloped roofs in Climate Zones 1 through 8, 12 and 16 are exempted from aged Solar Reflectance and emittance requirements.

☐ High-rise residential buildings and Hotels and Motels with steep-sloped roofs in Climate Zones 1 and 16 are exempt from aged Solar Reflectance and emittance requirements.

☐ The roof area covered by building integrated photovoltaic panels and building integrated solar thermal panels are exempt from aged Solar Reflectance and emittance requirements

To apply **Liquid Field Applied Coatings,** the coating must be applied across the entire roof surface and meet the dry mil thickness or coverage recommended by the coatings manufacturer and meet minimum performance requirements listed in §110.8(i)4. Select the applicable coating:

☐ Aluminum-Pigmented Asphalt Roof Coating ☐ Cement-Based Roof Coating ☐ Other _____

NOTES:

1. *Check the box if the aged Solar reflectance was not available in the Cool Roof Rating Council's Rated Product Directory, Then use the* equation in Section 110.8(i)2 where the *Initial Reflectance value from the same directory and use the equation* $(0.2+B(\rho_{initial}-0.2)$ *to obtain a calculated aged value. Where* ρ *is the Initial Solar Reflectance and* ***B*** *is either set to 0.65 for Field-Applied Coatings or it is set to 0.70 for all other roofing products other than Field-Applied Coating.*
2. *Calculate the SRI Value by using the SRI-Worksheet at (TBD) and enter the resulting value in the SRI Column above and attach a copy for the SRI-Worksheet NRCC-ENV-03-E to the to this form.*

F. Air Barrier

1	2	3	4	5
Tag/ID	Air Barrier Material Type	Air Barrier Assembly Type	Whole Building Air Leakage Testing	Comments

G. FENESTRATION PROPOSED AREAS AND EFFICIENCIES

1	2	3	4	5	6	7	8	9	10	11	12
Tag/ID	Fenestration Type	Area	Orientation N, S, W, E or Roof	# of Panes	Max U-Factor	Overhang	Max (R)SHGC	Min VT	Label	Conditions Status	Comments
1	Window No.3	9	N	1	0.36	No	0.25	0.42		Altered	
2	Window No.3	9	N	1	0.36	No	0.25	0.42		Altered	
3	Window No.3	9	N	1	0.36	No	0.25	0.42		Altered	
4	Window No.3	9	N	1	0.36	No	0.25	0.42		Altered	
5	Window No.1	8	N	1	0.36	No	0.25	0.42		Altered	
6	Window No.1	8	N	1	0.36	No	0.25	0.42		Altered	
7	Window No.1	8	N	1	0.36	No	0.25	0.42		Altered	
8	Window No.1	8	N	1	0.36	No	0.25	0.42		Altered	
9	Window No.2	8	E	1	0.36	No	0.25	0.42		Altered	

H. ENVELOPE MANDATORY MEASURES

Indicate location on building plans of Mandatory Envelope Measures Note Block: ENV-MM

INSTRUCTIONS TO APPLICANT ENVELOPE COMPLIANCE & WORKSHEETS (check box if worksheet are included)

For detailed instructions on the use of this and all Energy Efficiency Standards compliance forms, please refer to the Nonresidential Compliance Manual.

- ☑ NRCC-ENV-01-E Certificate of Compliance. Required on plans for all submittals.
- ☐ NRCC-ENV-04-E Use when minimum skylight requirements for large enclosed spaces are required in climate zones 2 through 15. Optional on plans.

G. FENESTRATION PROPOSED AREAS AND EFFICIENCIES

1	2	3	4	5	6	7	8	9	10	11	12
Tag/ID	Fenestration Type	Area	Orientation N, S, W, E or Roof	# of Panes	Max U-Factor	Overhang	Max (R)SHGC	Min VT	Label	Conditions Status	Comments
10	Window No.2	8	E	1	0.36	No	0.25	0.42		Altered	
11	Window No.2	8	E	1	0.36	No	0.25	0.42		Altered	
12	Storefront Door	21	S	1	0.45	No	0.23	0.17		Altered	
13	Window No.2	8	E	1	0.36	No	0.25	0.42		Altered	
14	Window No.2	8	E	1	0.36	No	0.25	0.42		Altered	
15	Window No.2	8	S	1	0.36	No	0.25	0.42		Altered	
16	Window No.2	8	S	1	0.36	No	0.25	0.42		Altered	
17	Window No.2	8	N	1	0.36	No	0.25	0.42		Altered	
18	Storefront Door	21	E	1	0.45	No	0.23	0.17		New	

H. ENVELOPE MANDATORY MEASURES

Indicate location on building plans of Mandatory Envelope Measures Note Block: ENV-MM

INSTRUCTIONS TO APPLICANT ENVELOPE COMPLIANCE & WORKSHEETS (check box if worksheet are included)

For detailed instructions on the use of this and all Energy Efficiency Standards compliance forms, please refer to the Nonresidential Compliance Manual.

- ☑ NRCC-ENV-01-E Certificate of Compliance. Required on plans for all submittals.
- ☐ NRCC-ENV-04-E Use when minimum skylight requirements for large enclosed spaces are required in climate zones 2 through 15. Optional on plans.

CERTIFICATE OF COMPLIANCE

Envelope Component Approach

Project Name: Public Library Expansion

Date Prepared: 5/8/2015

G. FENESTRATION PROPOSED AREAS AND EFFICIENCIES

1	2	3	4	5	6	7	8	9	10	11	12
Tag/ID	Fenestration Type	Area	Orientation N, S, W, E or Roof	# of Panes	Max U-Factor	Overhang	Max (R)SHGC	Min VT	Label	Conditions Status	Comments
19	Window No.1	8	N	1	0.36	No	0.25	0.42		Altered	
20	Window No.1	8	N	1	0.36	No	0.25	0.42		Altered	
21	Window No.1	8	N	1	0.36	No	0.25	0.42		Altered	
22	Window No.1	8	N	1	0.36	No	0.25	0.42		Altered	
23	Window No.1	8	N	1	0.36	No	0.25	0.42		Altered	
24	Window No.6	78	N	1	0.36	No	0.25	0.42		Altered	
25	Window No.6	78	N	1	0.36	No	0.25	0.42		Altered	
26	Storefront Door	42	W	1	0.45	No	0.23	0.17		New	

H. ENVELOPE MANDATORY MEASURES

Indicate location on building plans of Mandatory Envelope Measures Note Block: ENV-MM

INSTRUCTIONS TO APPLICANT ENVELOPE COMPLIANCE & WORKSHEETS (check box if worksheet are included)

For detailed instructions on the use of this and all Energy Efficiency Standards compliance forms, please refer to the Nonresidential Compliance Manual.

- ☑ NRCC-ENV-01-E Certificate of Compliance. Required on plans for all submittals.
- ☐ NRCC-ENV-04-E Use when minimum skylight requirements for large enclosed spaces are required in climate zones 2 through 15. Optional on plans.

CERTIFICATE OF COMPLIANCE – USER INSTRUCTIONS	NRCC-LTI-01-E
Indoor Lighting	(Page 1 of 5)
Project Name: Public Library Expansion	Date Prepared: 5/8/2015

Climate Zone: 15	Conditioned Floor Area : 11,295
	Unconditioned Floor Area : 0

General Information

Building Type:	☑	Nonresidential	☐	High-Rise Residential	☐	Hotel/Motel
☐ Schools	☐	Relocatable Public Schools	☑	Conditioned Spaces	☐	Unconditioned Spaces
Phase of Construction:	☐	New Construction	☐	Addition	☑	Alteration
Method of Compliance:	☑	Complete Building	☐	Area Category	☐	Tailored

LIGHTING COMPLIANCE DOCUMENTS (select yes for each document included)

For detailed instructions on the use of this and all Energy Efficiency Standards compliance documents, refer to the Nonresidential Manual published by the California Energy Commission.

YES	NO	FORM	TITLE
YES		NRCC-LIT-01-E	Certificate of Compliance. All Pages required on plans for all submittals.
YES		NRCC-LIT-02-E	Lighting Controls, Certificate of Compliance, and PAF Calculation. All Pages required on plans for all submittals.
	NO	NRCC-LIT-03-E	Indoor Lighting Power Allowance
	NO	NRCC-LIT-04-E	Tailored Method Worksheets
	NO	NRCC-LIT-05-E	Line Voltage Track Lighting Worksheets

Summary of Allowed Lighting Power

Conditioned and Unconditioned space Lighting must not be combined for compliance

	Indoor Lighting Power for Conditioned Spaces		Watts	Indoor Lighting Power for Unconditioned Spaces		Watts
1.	**Installed** Lighting NRCC-LTI-01-E, page 4	+	11,525	**Installed** Lighting NRCC-LTI-01-E, page 4	+	0
2.	PORTABLE ONLY FOR OFFICES NRCC-LTI-01-E, page 3	+				
3.	Minus Lighting Control Credits NRCC-LTI-02-E, page 2	-	700	Minus Lighting Control Credits NRCC-LTI-02-E, page 2	-	0
4.	Adjusted **Installed** Lighting Power (row 1 plus row 2 minus row 3)	=	10,825	Adjusted **Installed** Lighting Power (row 1 minus row 3)	=	0

5.	Complies ONLY if **Installed ≤ Allowed**		Complies ONLY if **Installed ≤ Allowed**	
6.	**Allowed** Lighting Power Conditioned NRCC-LTI-03-E, page 1	10,825	**Allowed** Lighting Power Unconditioned NRCC-LTI-03-E, page 1	0

Declaration of Required Installation Certificates – Declare by selecting yes for all Installation Certificates that will be submitted. (Retain copies and verify forms are completed and signed.)

YES	NO	Form/Title	
		NRCI-LTI-01-E - Must be submitted for all buildings	☐ Field Inspector
		NRCI-LTI-02-E - Must be submitted for a lighting control system, or for an Energy Management Control System (EMCS), to be recognized for compliance.	☐ Field Inspector
		NRCI-LTI-03-E - Must be submitted for a line-voltage track lighting integral current limiter, or for a supplementary overcurrent protection panel used to energize only line-voltage track lighting, to be recognized for compliance.	☐ Field Inspector
		NRCI-LTI-04-E - Must be submitted for two interlocked systems serving an auditorium, a convention center, a conference room, a multipurpose room, or a theater to be recognized for compliance.	☐ Field Inspector
		NRCI-LTI-05-E - Must be submitted for a Power Adjustment Factor (PAF) to be recognized for compliance.	☐ Field Inspector
		NRCI-LTI-06-E - Must be submitted for additional wattage installed in a video conferencing studio to be recognized for compliance.	☐ Field Inspector

Declaration of Required Certificates of Acceptance – Declare by checking all of the Certificates of Acceptance that will be submitted. (Retain copies and verify forms are completed and signed.)

YES	NO	Form/Title	
		NRCA-LTI-02-A - Must be submitted for occupancy sensors and automatic time switch controls.	☐ Field Inspector
		NRCA-LTI-03-A - Must be submitted for automatic daylight controls.	☐ Field Inspector
		NRCA-LTI-04-A - Must be submitted for demand responsive lighting controls.	☐ Field Inspector

A separate Lighting Schedule Must Be Filled Out for Conditioned and Unconditioned Spaces. Installed Lighting Power listed on this Lighting Schedule is only for:

☑ **CONDITIONED SPACE** ☐ **UNCONDITIONED SPACE**

A. INDOOR LIGHTING SCHEDULE and FIELD INSPECTION ENERGY CHECKLIST

- ☐ The actual indoor lighting power listed on this page and on the next page includes all installed permanent and planned portable lighting systems.
- ☐ When Complete Building Method is used for compliance, list each different type of luminaire on separate lines.
- ☐ When Area Category Method or Tailored Method is used for compliance, list each different type of luminaire by each different function area on separate lines
- ☐ Also include track lighting in schedule, and submit the track lighting compliance form (NRCC-LTI-05-E) when line-voltage track lighting is installed.

B. Installed Portable Luminaires in Offices – Exception to Section 140.6(a)

- ☐ This section shall be filled out ONLY for portable luminaires in offices (As defined in §100.1). All other planned portable luminaires shall be documented on next page of this compliance form.
- ☐ This section is used to determine if greater than 0.3 watts of portable lighting is planned for any office
- ☐ Fill out a separate line for each different office. Small offices that are typical (having the same general and portable lighting) may be grouped together. This allowance shall not be traded between offices having different lighting systems.

Office Portable Luminaire Schedule	Office Installed Portable Luminaire Watts Per Square Foot						Accountable Watts	Office Location	Field Inspector	
A	B	C	D	E	F	G	H	I	J	
Complete Luminaire Description (i.e., LED, under cabinet, furniture mounted direct/indirect)	Watts per Luminaire	Number of Luminaires	Installed portable luminaire watts in this office (B x C)	Square feet of this office	Watts per square foot (D / E)	If F ≤ 0.3, enter zero; if F > 0.3, (F-0.3)	E x G	Identify Office area in which these portable luminaires are installed	Pass	Fail
									☐	☐
									☐	☐
									☐	☐
									☐	☐
									☐	☐
Total installed portable luminaire watts that are greater than 0.3 watts per square foot per office:								Enter sum total of all pages into NRCC-LTI-01-E; Page 1		

A separate Lighting Schedule Must Be Filled Out for Conditioned and Unconditioned Spaces. Installed Lighting Power listed on this Lighting Schedule is only for:

☑ **CONDITIONED SPACE** ☐ **UNCONDITIONED SPACE**

C. INDOOR LIGHTING SCHEDULE and FIELD INSPECTION ENERGY CHECKLIST

Luminaire Schedule		Installed Watts					Location	Field Inspector [1]	
A	B	C	D		E	F	G	H	
Name or Item Tag	Complete Luminaire Description (i.e, 3 lamp fluorescent troffer, F32T8, one dimmable electronic ballast)	Watts per Luminaire	How wattage was determined: CEC Default from NA8	How wattage was determined: According to §130.0(c)	Number Luminaires	Total Installed Watts in this area (C x E)	Primary Function area in which these luminaires are installed	Pass	Fail
	2x4 Led Light Fixture (4) Lamps	40.0	☑	☐	4	160	Computer Room	☐	☐
	2x4 Led Light Fixture (4) Lamps	40.0	☑	☐	26	1,040	Convention/Conference/Meetin	☐	☐
	2x2 Led Light Fixture (4) Lamps	32.0	☑	☐	21	672	Convention/Conference/Meetin	☐	☐
	Standard Allowance: 7271 sqft at 1.200 watt/s		☐	☐		8,725	Library, Reading Area	☐	☐
	2x4 Led Light Fixture (4) Lamps	40.0	☑	☐	16	640	Library, Reading Area	☐	☐
	2x2 Led Light Fixture (4) Lamps	32.0	☑	☐	9	288	Office <= 250 sqft	☐	☐
			☐	☐				☐	☐
			☐	☐				☐	☐
			☐	☐				☐	☐
					INSTALLED WATTS PAGE TOTAL:	11,525	Enter sum total of all pages into NRCC-LTI-01-E; Page 2		

CERTIFICATE OF COMPLIANCE

Mechanical Systems

Project Name: Public Library Expansion

Date Prepared: 5/8/2015

MECHANICAL COMPLIANCE FORMS & WORKSHEETS (check box if worksheet is included)

For detailed instructions on the use of this and all Energy Efficiency Standards compliance forms, refer to the 2013 Nonresidential Manual
Note: The Enforcement Agency may require all forms to be incorporated onto the building plans.

YES	NO	Form/Worksheet #	Title
☑	☐	NRCC-MCH-01-E (Part 1 of 3)	Certificate of Compliance, Declaration. Required on plans for all submittals.
☑	☐	NRCC-MCH-01-E (Part 2 of 3)	Certificate of Compliance, Required Acceptance Tests (MCH-02A to 11A). Required on plans for all submittals.
☑	☐	NRCC-MCH-01-E (Part 3 of 3)	Certificate of Compliance, Required Acceptance Tests (MCH-12A to 18A). Required on plans where applicable.
☑	☐	NRCC-MCH-02-E (Part 1 of 2)	Mechanical Dry Equipment Summary is required for all submittals with Central Air Systems. It is optional on plans.
☑	☐	NRCC-MCH-02-E (Part 2 of 2)	Mechanical Wet Equipment Summary is required for all submittals with chilled water, hot water or condenser water systems. It is optional on plans.
☑	☐	NRCC-MCH-03-E	Mechanical Ventilation and Reheat is required for all submittals with multiple zone heating and cooling systems. It is optional on plans.

MECHANICAL HVAC ACCEPTANCE FORMS (check box for required forms)

Designer:
This form is to be used by the designer and attached to the plans. Listed below are all the acceptance tests for HVAC systems. The designer is required to check the applicable boxes for all acceptance tests that apply and list all equipment that requires an acceptance test. All equipment of the same type that requires a test, list the equipment description and the number of systems.

Installing Contractor:
The contractor who installed the equipment is responsible to either conduct the acceptance test them self or have a qualified entity run the test for them. If more than one person has responsibility for the acceptance testing, each person shall sign and submit the Certificate of Acceptance applicable to the portion of the construction or installation for which they are responsible.

Enforcement Agency:
Plancheck – The NRCC-MCH-01-E form is not considered a completed form and is not to be accepted by the building department unless the correct boxes are checked.
Inspector - Before occupancy permit is granted all newly installed process systems must be tested to ensure proper operations.

Test Description		MCH-02A	MCH-03A	MCH-04A	MCH-05A	MCH-06A	MCH-07A	MCH-08A	MCH-09A	MCH-10A	MCH-11A
Equipment Requiring Testing or Verification	# of units	Outdoor Air	Single Zone Unitary	Air Distribution Ducts	Economizer Controls	Demand Control Ventilation (DCV)	Supply Fan VAV	Valve Leakage Test	Supply Water Temp. Reset	Hydronic System Variable Flow Control	Automatic Demand Shed Control
Day & Night RH	2	☑	☑	☑	☐	☐	☐	☐	☐	☐	☐
		☐	☐	☐	☐	☐	☐	☐	☐	☐	☐
		☐	☐	☐	☐	☐	☐	☐	☐	☐	☐
		☐	☐	☐	☐	☐	☐	☐	☐	☐	☐
		☐	☐	☐	☐	☐	☐	☐	☐	☐	☐
		☐	☐	☐	☐	☐	☐	☐	☐	☐	☐

MECHANICAL HVAC ACCEPTANCE FORMS (check box for required forms)

Designer:
This form is to be used by the designer and attached to the plans. Listed below are all the acceptance tests for HVAC systems. The designer is required to check the applicable boxes for all acceptance tests that apply and list all equipment that requires an acceptance test. All equipment of the same type that requires a test, list the equipment description and the number of systems.

Installing Contractor:
The contractor who installed the equipment is responsible to either conduct the acceptance test them self or have a qualified entity run the test for them. If more than one person has responsibility for the acceptance testing, each person shall sign and submit the Certificate of Acceptance applicable to the portion of the construction or installation for which they are responsible. The following tests require a

Enforcement Agency:
Plancheck – The NRCC-MCH-01-E form is not considered a completed form and is not to be accepted by the building department unless the correct boxes are checked.
Inspector - Before occupancy permit is granted all newly installed process systems must be tested to ensure proper operations.

Test Description		MCH-12A	MCH-13A	MCH-14A	MCH-15A	MCH-16A	MCH-17A	MCH-18A
Equipment Requiring Testing or Verification	# of units	Fault Detection & Diagnostics for DX Units	Automatic Fault Detection & Diagnostics for Air & Zone	Distributed Energy Storage DX AC Systems	Thermal Energy Storage (TES) Systems	Supply Air Temperature Reset Controls	Condenser Water Reset Controls	ECMS
Day & Night RH	2	☐	☐	☐	☐	☐	☐	☐
		☐	☐	☐	☐	☐	☐	☐
		☐	☐	☐	☐	☐	☐	☐
		☐	☐	☐	☐	☐	☐	☐
		☐	☐	☐	☐	☐	☐	☐
		☐	☐	☐	☐	☐	☐	☐
		☐	☐	☐	☐	☐	☐	☐
		☐	☐	☐	☐	☐	☐	☐
		☐	☐	☐	☐	☐	☐	☐
		☐	☐	☐	☐	☐	☐	☐

Project Name: Public Library Expansion

Date Prepared: 5/8/2015

The NRCC-LTI-02-E shall be used to document all mandatory and prescriptive lighting controls that are applicable to the project.

Mandatory Lighting Control Declaration Statements (Indicate if the measure applies by checking yes or no below.)

YES	NO	Control Requirements
		Lighting shall be controlled by self-contained lighting control devices which are certified to the Energy Commission according to the Title 20 Appliance Efficiency Regulations in accordance with Section 110.9.
		Lighting shall be controlled by a lighting control a system or energy management control system in accordance with §110.9. An Installation Certificate shall be submitted in accordance with Section 130.4(b).
		One or more Track Lighting Integral Current Limiters shall be installed which have been certified to the Energy Commission in accordance with §110.9 and §130.0. Additionally, an Installation Certificate shall be submitted in accordance with Section 130.4(b).
		A Track Lighting Supplementary Overcurrent Protection Panel shall be installed in accordance with Section 110.9 and Section 130.0. Additionally, an Installation Certificate shall be installed in accordance with Section 130.4(b).
		All lighting controls and equipment shall comply with the applicable requirements in §110.9 and shall be installed in accordance with the manufacturer's instructions in accordance with Section 130.1.
		All luminaires shall be functionally controlled with manually switched ON and OFF lighting controls in accordance with Section 130.1(a).
		General lighting shall be separately controlled from all other lighting systems in an area. Floor and wall display, window display, case display, ornamental, and special effects lighting shall each be separately controlled on circuits that are 20 amps or less. When track lighting is used, general, display, ornamental, and special effects lighting shall each be separately controlled; in accordance with Section 130.1(a)4.
		The general lighting of any enclosed area 100 square feet or larger, with a connected lighting load that exceeds 0.5 watts per square foot shall meet the multi-level lighting control requirements in accordance with Section 130.1(b).
		All installed indoor lighting shall be equipped with controls that meet the applicable Shut-OFF control requirements in Section 130.1(c).
		Lighting in all Daylit Zones shall be controlled in accordance with the requirements in Section 130.1(d) and daylit zones are shown on the plans.
		Lighting power in buildings larger than 10,000 square feet shall be capable of being automatically reduced in response to a Demand Responsive Signal in accordance with Section 130.1(e).
		Before an occupancy permit is granted for a newly constructed building or area, or a new lighting system serving a building, area, or site is operated for normal use, indoor lighting controls serving the building, area, or site shall be certified as meeting the Acceptance Requirements for Code Compliance in accordance with Section 130.4.(a). The controls required to meet the Acceptance Requirements include automatic daylight controls, automatic shut-OFF controls, and demand responsive controls.

CERTIFICATE OF COMPLIANCE	NRCC-LTI-02-E
Indoor Lighting - Lighting Controls	(Page 2 of 3)
Project Name: Public Library Expansion	Date Prepared: 5/8/2015

A separate document must be filled out for Conditioned and Unconditioned Spaces. This page is used only for the following:

☑ CONDITIONED SPACES ☐ UNCONDITIONED SPACES

MANDATORY AND PRESCRIPTIVE INDOOR LIGHTING CONTROL SCHEDULE, PAF CALCULATION, and FIELD INSPECTION CHECKLIST

Lighting Control Schedule			Standards Complying With [1] (✓ all that apply, or enter 'E' if Exempted)							PAF Credit Calculation [2]			✓ if Acceptance Test Required	Field Inspector	
A	B	C	D	E	F	G	H	I	J	K	L	M	N	O	
Location in Building	Type/ Description of Lighting Control (i.e.: occupancy sensor, automatic time switch, dimmer, automatic daylight, etc...)	# of Units	§130.1(a)	§130.0(b)	§130.1(c)	§130.1(d)	§130.1(e)	§140.6(a)2	§140.6(d)	Watts of Controlled Lighting	PAF	Control Credit (K x L)		Pass	Fail
Carnegie Area	Dimming w/Occ Sensor							✓		280	0.25	70	✓	☐	☐
Office	Dimming w/Occ Sensor							✓		288	0.25	72	✓	☐	☐
Computer Room	Dimming w/Occ Sensor							✓		160	0.25	40	✓	☐	☐
Reading Room	Dimming w/Occ Sensor							✓		360	0.25	90	✓	☐	☐
Conference/Meeting Room	Dimming w/Occ Sensor							✓		1,040	0.25	260	✓	☐	☐
Conference/Meeting Room	Dimming w/Occ Sensor							✓		672	0.25	168	✓	☐	☐
														☐	☐
Control Credit PAGE TOTAL (Sum of Column M):												700			
IF MULTIPLE PAGES ARE USED, ENTER SUM TOTAL OF Control Credit for all pages HERE (Sum of all Column M):												700			
												Enter Control Credit total into NRCC-LTI-01-E; Page 1.			

1. §130.1(a) = Manual area controls; §130.0(b) = Multi Level; §130.1(c) = Auto Shut-Off; §130.1(d) = Mandatory Daylight; §130.1(e) = Demand Responsive; §140.6(d) = Additional lighting controls installed to earn a PAF; §140.6(d) = Prescriptive Secondary Sidelit Daylight Controls.

2. Check Table 140.6-A for correct Factor. PAFs shall not be traded between conditioned and unconditioned spaces. As a condition to earn a PAF, an Installation Certificate is also required to be filled out, signed, and submitted.

CERTIFICATE OF COMPLIANCE	NRCC-MCH-02-E
HVAC Dry System Requirements	(Page 1 of 3)
Project Name: Public Library Expansion	Date Prepared: 5/8/2015

Equipment Tags and System Description[1]		Existing System	New System	
MANDATORY MEASURES	***T-24 Sections***	***Reference to the Requirements in the Contract Documents[2]***		
Heating Equipment Efficiency[3]	110.1 or 110.2(a)			
Cooling Equipment Efficiency[3]	110.1 or 110.2(a)			
HVAC or Heat Pump Thermostats	110.2(b), 110.2(c)			
Furnace Standby Loss Control	110.2(d)			
Low leakage AHUs	110.2(f)			
Ventilation[4]	120.1(b)			
Demand Control Ventilation[5]	120.1(c)4			
Occupant Sensor Ventilation Control[6]	120.1(c)5, 120.2(e)3			
Shutoff and Reset Controls[7]	120.2(e)			
Outdoor Air and Exhaust Damper Control	120.2(f)			
Isolation Zones	120.2(g)			
Automatic Demand Shed Controls	120.2(h)			
Economizer FDD	120.2(i)			
Duct Insulation	120.4			
PRESCRIPTIVE MEASURES				
Equipment is sized in conformance with 140.4 (a & b)	140.4(a & b)	Y	Y	
Supply Fan Pressure Control	140.4(c)			
Simultaneous Heat/Cool[8]	140.4(d)			
Economizer	140.4(e)			
Heat and Cool Air Supply Reset	140.4(f)			
Electric Resistance Heating[9]	140.4(g)			
Duct Leakage Sealing and Testing.[10]	140.4(l)			

Notes:

1. *Provide equipment tags (e.g. AHU 1 to 10) and system description (e.g. Single Duct VAV reheat) as appropriate. Multiple units with common requirements can be grouped together.*
2. *Provide references to plans (i.e. Drawing Sheet Numbers) and/or specifications (including Section name/number and relevant paragraphs) where each requirement is specified. Enter "N/A" if the requirement is not applicable to this system.*
3. *The referenced plans and specifications must include all of the following information: equipment tag, equipment nominal capacity, Title 24 minimum efficiency requirements, and actual rated equipment efficiencies. Where multiple efficiency requirements are applicable (e.g. full- and part-load) include all. Where appliance standards apply (110.1), identify where equipment is required to be listed per Title 20 1601 et seq.*
4. *Identify where the ventilation requirements are documented for each central HVAC system. Include references to both central unit schedules and sequences of operation. If one or more space is naturally ventilated identify where this is documented in the plans and specifications. Multiple zone central air systems must also provide a MCH-03-E form.*
5. *If one or more space has demand controlled ventilation identify where it is specified including the sensor specifications and the sequence of operation.*
6. *If one or more space has occupant sensor ventilation control identify where it is specified including the sensor specifications and the sequence of operation*
7. *If the system is DDC identify the sequences for the system start/stop, optimal start, setback (if required) and setup (if required). For all systems identify the specification for the thermostats and time clocks (if applicable).*
8. *Identify where the heating, cooling and deadband airflows are scheduled for this system. Include a reference to the specification of the zone controls. Provide a MCH-03-E form.*
9. *Enter N/A if there is no electric heating. If the system has electric heating indicate which exception to 140.4(g) applies.*
10. *If duct leakage sealing and testing is required, a MCH-04-A form must be submitted.*

STATE OF CALIFORNIA

MECHANICAL VENTILATION AND REHEAT

CEC-NRCC-MCH-03-E (Revised 06/14)

CALIFORNIA ENERGY COMMISSION

NRCC-MCH-03-E

CERTIFICATE OF COMPLIANCE

Mechanical Ventilation & Reheat

Project Name: Public Library Expansion

Date Prepared: 5/8/2015

ACTUAL DESIGN INFO (FROM EQUIPMENT SCHEDULES, ETC)						AREA BASIS			OCCUPANCY BASIS			MINIMUM		VAV Reheated Primary Air CFM			VAV Deadband Primary Air CFM		
A	B	C	D	E	F	G	H	I	J	K	L	M	N	O	P	Q	R	S	T
ZONE/ SYSTEM/ VAV BOX TAG	DESIGN PRIMARY COOLING AIRFLOW (CFM)	DESIGN PRIMARY DEAD-BAND AIRFLOW (CFM)	DESIGN PRIMARY HEATING AIRFLOW (CFM)	CNTRL TYPE DDC (Y/N)	TRANSFER AIRFLOW (CFM)	CONDI-TIONED AREA (ft^2)	MIN CFM PER AREA	MIN CFM BY AREA	NUM. OF PEOPLE	CFM PER PERSON	MIN CFM BY OCCU-PANT	REQ'D VENT AIRFLOW (MAX OF I OR L) (CFM)	COM-PLIES	PRIMARY COOLING AIR (50% DDC,30% NON-DDC) (CFM)	MAXIMUM REHEAT CFM (MAX OF M OR O)	COM-PLIES?	(20% DDC, N/A NON-DDC) (CFM)	(larger of M or R, N/A for NON-DDC) (CFM)	COM-PLIES
Existin						7,271	0.15	1,091	145.4	7.5	1,091	1,091	Y						
Carne						158	0.15	24	3.2	7.5	24	24	Y						
Directc						144	0.15	22	1.4	15.0	22	22	Y						
Compu						231	0.15	35	0.7	50.0	35	35	Y						
Kids Z						582	0.15	87	11.6	7.5	87	87	Y						
											Total	1,258							
Confer						2,909	0.50	1,454	194.9	7.5	1,454	1,454	Y						
											Total	1,454							

Yellow shaded cells require user input. Remaining cells are protected and automatic

B. The largest amount of primary air supplied by the terminal unit when it's operating in the cooling mode.
C. The smallest amount of primary air supplied by the terminal unit in the deadband mode.
D. The largest amount of primary air supplied by the terminal unit when it's operating in the heating mode.
E. A terminal unit can be controlled with DDC controls, or non-DDC controls. Each control category has different reheat limitations in code.
F. Transfer Air must be provided where Required Ventilation Airflow (Column M) is greater than the Design Primary Deadband Airflow (Column C).
H. Minimum ventilation rate per Section §120.1. Table 120.1-A.
J. Based on number of fixed seats where applicable or the greater of the expected number of occupants and 50% of the CBC occupant load for egress purposes for spaces without fixed seating.
M. Required Ventilation Airflow (Req'd Ventilation Airflow) is the larger of the ventilation rates calculated on an AREA BASIS or OCCUPANCY BASIS (Column I or L)
N. This column identifies whether or not the Design Primary Deadband Airflow complies or not. It compares the value in column M to the value in column C and column F.
O. Design Primary Cooling Airflow * 0.50 for DDC, Design Primary Cooling Airflow * 0.30 for Non-DDC. If the Design Primary Cooling Airflow is less than 300 cfm, then this is not applicable.
P. Maximum of Column M and Column O. If the Design Primary Cooling Airflow is 300 cfm or less, then this is not applicable.
Q. This column identifies whether or not the Design Primary Reheat Airflow at the zone level, complies or not. It compares the value in column P to the value in column D.
R. Design Primary Cooling Airflow * 0.20 for DDC. Not applicable for Non-DDC zones or zones where Design Primary Cooling Airflow is is 300 cfm or less.
S. Maximum of Column M and Column R. Not applicable if the Design Primary Cooling Airflow is 300 cfm or less.
T. This column identifies whether or not the Design Primary Deadband Airflow at the zone level, complies or not. It compares the value in column S to the value in column C.

MECHANICAL EQUIPMENT DETAILS

(Part 1 of 2) **NRCC-MCH-08-E**

Project Name
Public Library Expansion

Date
5/8/2015

CHILLER AND TOWER SUMMARY

					PUMPS			
Equipment Name	Type	Qty.	Efficiency	Tons	Qty.	GPM	BHP	Pump Control

DHW / BOILER SUMMARY

System Name	Type	Distribution	Qty.	Rated Input	Vol. (Gals).	Energy Factor or RE	Standby Loss or Pilot	Tank Ext. R-Value	Status

MULTI-FAMILY CENTRAL WATER HEATING DETAILS

	Hot Water Pump			Hot Water Piping Length (ft)			
Control	Qty.	HP	Type	In Plenum	Outside	Buried	Add ½" Insulation
							☐
							☐
							☐

CENTRAL SYSTEM RATINGS

			HEATING			COOLING		
System Name	Type	Qty.	Output	Aux. kW	Efficiency	Output	Efficiency	Status
Rheem RJMA-A060CL	*Packaged DX*	*7*	*60,000*	*0.0*	*7.70 HSPF*	*59,000*	*13.0 SEER / 11.5 EER*	*Existing*
*Day & Night RHH060*0XA0AAA*	*Packaged DX*	*2*	*60,000*	*0.0*	*8.00 HSPF*	*59,000*	*15.0 SEER / 11.5 EER*	*New*

CENTRAL SYSTEM FAN SUMMARY

			SUPPLY FAN		RETURN FAN	
System Name	Fan Type	Economizer Type	CFM	BHP	CFM	BHP
Rheem RJMA-A060CL	*Constant Volume*	*No Economizer*	*2,000*	*0.75*	*none*	
*Day & Night RHH060*0XA0AAA*	*Constant Volume*	*No Economizer*	*2,000*	*0.75*	*none*	

WATER HEATING SYSTEM GENERAL INFORMATION

CERTIFICATE OF COMPLIANCE	NRCC-PLB-01-E
Water Heating System General Information	(Page 1 of 2)
Project Name: *Public Library Expansion*	Date Prepared: *5/8/2015*

A. GENERAL INFORMATION/SYSTEM INFORMATION		
1.	Water Heater System Name:	
2.	Water Heater System Configuration:	*Non-Central*
3.	Water Heater System Type:	
4.	Building Type:	
5.	Total Number of Water Heaters in Systems:	*1*
6.	Central DHW Distribution Type:	*n/a*
7.	Dwelling Unit DHW Distribution Type:	*Standard*

B. WATER HEATER INFORMATION *Each water heater type requires a separate form.*		
1.	Water Heater Type:	
2.	Fuel Type	
3.	Number of Identical Water Heaters:	
4.	Efficiency:	
5.	Required Minimum Efficiency:	
6.	Standby loss percent or Standby loss total:	
7.	Rated Input	
8.	Pilot Energy:	
9.	Water Heater Tank Storage Volume:	
10.	Exterior Insulation On Water Heater:	
11.	Volume of Supplemental Storage:	
12.	Internal Insulation on Supplemental Storage:	
13.	Exterior Insulation on Supplemental Storage:	

PLUMBING COMPLIANCE FORMS & WORKSHEETS (check box if worksheet is included)

For detailed instructions on the use of this and all Energy Efficiency Standards compliance forms, refer to the 2013 Nonresidential Manual

Note: The Enforcement Agency may require all forms to be incorporated onto the building plans.

YES	NO	Form/Worksheet #	Title
☑	☐	NRCC-PLB-01-E	Certificate of Compliance, Declaration. Required on plans for all submittals.
☐	☐	NRCI-PLB-01-E	Certificate of Installation. Required on plans for all submittals.
☐	☐	NRCI-PLB-02-E	Certificate of Installation, required on central systems in high-rise residential, hotel/motel application.
☐	☐	NRCI-PLB-03-E	Certificate of Installation, required on single dwelling unit systems in high-rise residential, hotel/motel application.
☐	☐	NRCI-PLB-21-H	Certificate of Installation, required on HERS verified central systems in high-rise residential, hotel/motel application.
☐	☐	NRCI-PLB-22-H	Certificate of Installation, required on HERS verified single dwelling unit systems in high-rise residential, hotel/motel application.
☐	☐	NRCI-STH-01-E	Certificate of Installation, required on any solar water heating

ENVELOPE MANDATORY MEASURES: NONRESIDENTIAL

ENV-MM

Project Name	Date
Public Library Expansion	*5/8/2015*

DESCRIPTION

Building Envelope Measures:

§110.8(a):	Installed insulating material shall have been certified by the manufacturer to comply with the California Quality Standards for insulating material, Title 20 Chapter 4, Article 3.
§110.8(c):	All Insulating Materials shall be installed in compliance with the flame spread rating and smoke density requirements of Sections 2602 and 707 of Title 24, Part 2.
§110.8(f):	The opaque portions of framed demising walls in nonresidential buildings shall have insulation with an installed R-value of no less than R-13 between framing members.
§110.7(a):	All Exterior Joints and openings in the building that are observable sources of air leakage shall be caulked, gasketed, weatherstripped or otherwise sealed.
§110.6(a):	Manufactured fenestration products and exterior doors shall have air infiltration rates not exceeding 0.3 cfm/ft.^{2} of window area, 0.3 cfm/ft.^{2} of door area for residential doors, 0.3 cfm/ft.^{2} of door area for nonresidential single doors (swinging and sliding), and 1.0 cfm/ft.^{2} for nonresidential double doors (swinging).
§110.6(a):	Fenestration U-factor shall be rated in accordance with NFRC 100, or the applicable default U-factor.
§110.6(a) :	Fenestration SHGC shall be rated in accordance with NFRC 200, or NFRC 100 for site-built fenestration, or the applicable default SHGC.
§110.6(b):	Site Constructed Doors, Windows and Skylights shall be caulked between the unit and the building, and shall be weatherstripped (except for unframed glass doors and fire doors).

HVAC SYSTEM HEATING AND COOLING LOADS SUMMARY

Project Name	Date
Public Library Expansion	5/8/2015
System Name	**Floor Area**
Existing System	8,386

ENGINEERING CHECKS

Number of Systems	7
Heating System	
Output per System	60,000
Total Output (Btuh)	420,000
Output (Btuh/sqft)	50.1
Cooling System	
Output per System	59,000
Total Output (Btuh)	413,000
Total Output (Tons)	34.4
Total Output (Btuh/sqft)	49.2
Total Output (sqft/Ton)	243.7
Air System	
CFM per System	2,000
Airflow (cfm)	14,000
Airflow (cfm/sqft)	1.67
Airflow (cfm/Ton)	406.8
Outside Air (%)	9.0 %
Outside Air (cfm/sqft)	0.15

Note: values above given at ARI conditions

SYSTEM LOAD

	COIL COOLING PEAK			COIL HTG. PEAK	
	CFM	Sensible	Latent	CFM	Sensible
Total Room Loads	14,079	187,476	32,662	1,486	76,812
Return Vented Lighting		0			
Return Air Ducts		9,374			3,841
Return Fan		0			0
Ventilation	1,258	48,092	17,244	1,258	59,496
Supply Fan		16,117			-16,117
Supply Air Ducts		9,374			3,841
TOTAL SYSTEM LOAD		270,433	49,905		127,872

HVAC EQUIPMENT SELECTION

Rheem RJMA-A060CL	266,133	108,802		262,321
Total Adjusted System Output (Adjusted for Peak Design conditions)	266,133	108,802		262,321
TIME OF SYSTEM PEAK		Aug 2 PM		Jan 1 AM

HEATING SYSTEM PSYCHROMETRICS (Airstream Temperatures at Time of Heating Peak)

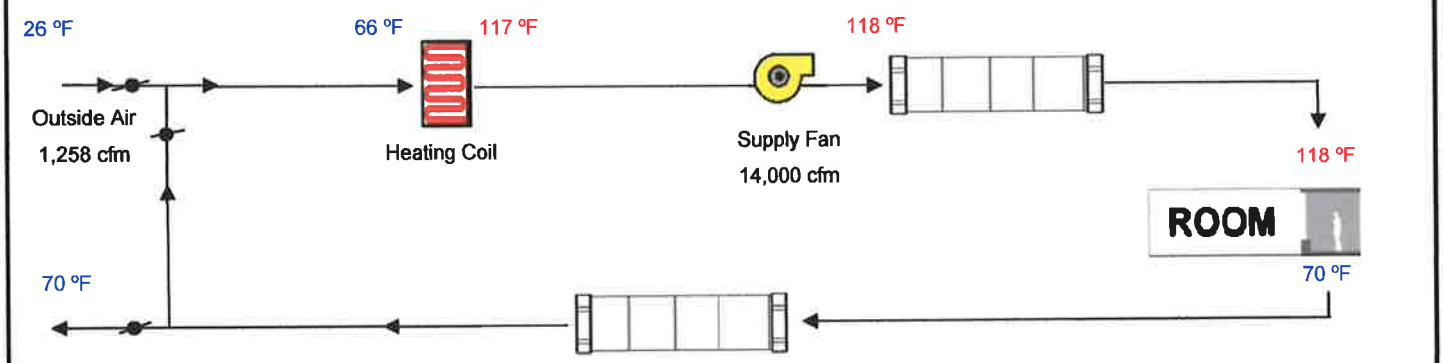

COOLING SYSTEM PSYCHROMETICS (Airstream Temperatures at Time of Cooling Peak)

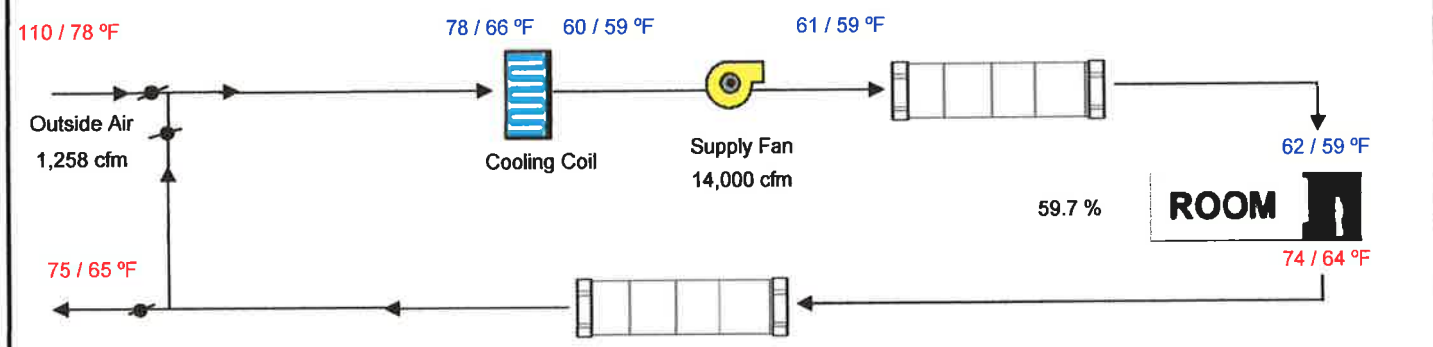

HVAC SYSTEM HEATING AND COOLING LOADS SUMMARY

Project Name	Date
Public Library Expansion	5/8/2015
System Name	**Floor Area**
New System	2,909

ENGINEERING CHECKS

Number of Systems	2
Heating System	
Output per System	60,000
Total Output (Btuh)	120,000
Output (Btuh/sqft)	41.3
Cooling System	
Output per System	59,000
Total Output (Btuh)	118,000
Total Output (Tons)	9.8
Total Output (Btuh/sqft)	40.6
Total Output (sqft/Ton)	295.8
Air System	
CFM per System	2,000
Airflow (cfm)	4,000
Airflow (cfm/sqft)	1.38
Airflow (cfm/Ton)	406.8
Outside Air (%)	36.4 %
Outside Air (cfm/sqft)	0.50

Note: values above given at ARI conditions

SYSTEM LOAD

	COIL COOLING PEAK			COIL HTG. PEAK	
	CFM	Sensible	Latent	CFM	Sensible
Total Room Loads	5,919	77,077	30,205	370	19,140
Return Vented Lighting		0			
Return Air Ducts		3,854			957
Return Fan		0			0
Ventilation	1,454	56,775	14,051	1,454	68,834
Supply Fan		4,605			-4,605
Supply Air Ducts		3,854			957
TOTAL SYSTEM LOAD		146,164	44,255		85,283

HVAC EQUIPMENT SELECTION

Day & Night RHH060*0XA0AAA	98,224	16,869		74,949
Total Adjusted System Output (Adjusted for Peak Design conditions)	98,224	16,869		74,949
TIME OF SYSTEM PEAK		Jul 3 PM		Jan 1 AM

HEATING SYSTEM PSYCHROMETRICS (Airstream Temperatures at Time of Heating Peak)

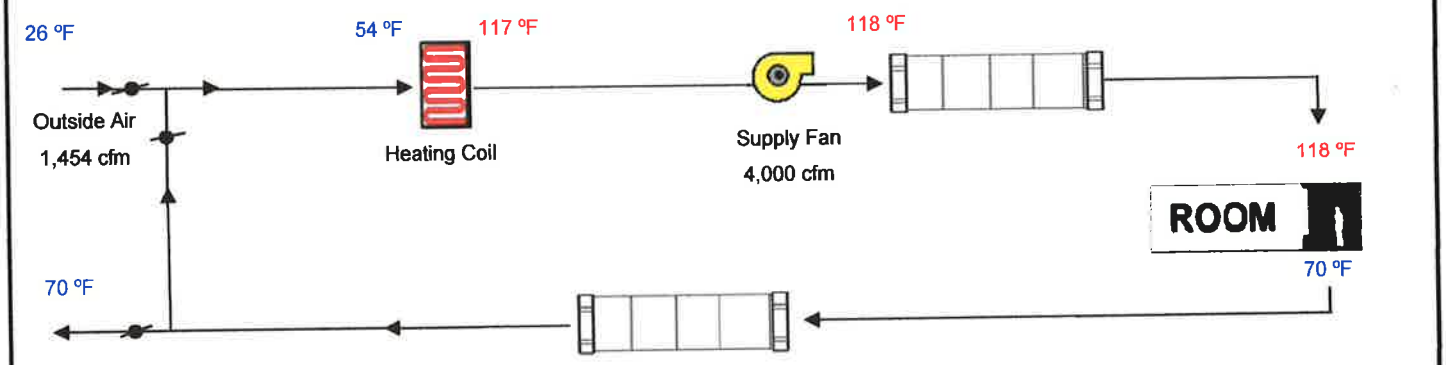

COOLING SYSTEM PSYCHROMETICS (Airstream Temperatures at Time of Cooling Peak)

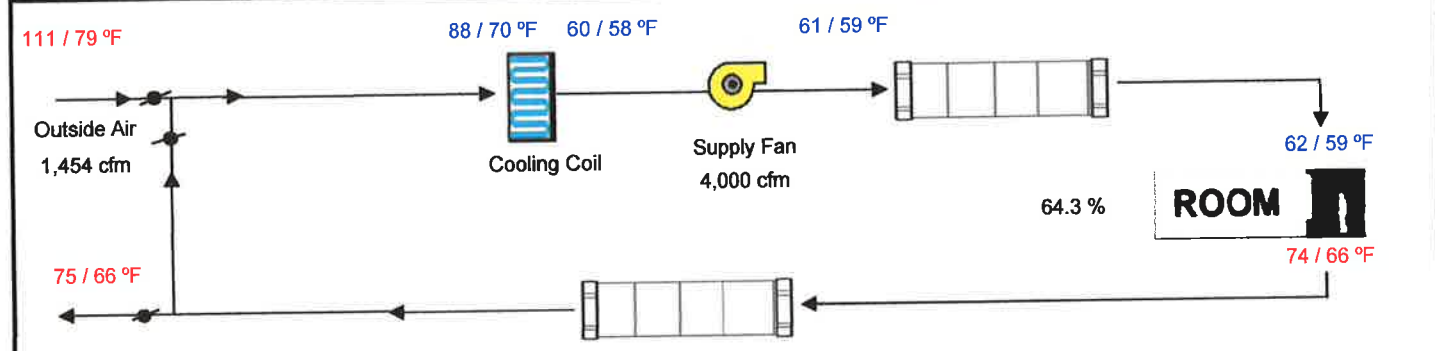

ZONE LOAD SUMMARY

Project Name
Public Library Expansion

Date
5/8/2015

System Name
Existing System

Floor Area
8,386

ZONE LOAD SUMMARY

		ZONAL SYSTEM						COOLING PEAK				HEATING PEAK	
ZONE NAME	SYSTEM NAME	Mult.	CFM	Sensible	Latent	Heating	OA CFM	Peak Hr	CFM	Sensible	Latent	CFM	Sensible
Existing Library Zone 6		1.0					1,091	Aug 2 PM	12,685	211,337	53,363	1,220	114,949
Carnegie Room Zone 1		1.0					24	Aug 2 PM	325	5,252	1,157	61	4,285
Director's Office Zone 2		1.0					22	Jul 3 PM	267	4,422	769	56	3,942
Computer Zone 3		1.0					35	Jul 3 PM	133	3,155	1,097	58	4,659
Kids Zone 5		1.0					87	Jul 3 PM	672	12,437	4,270	90	8,818
		TOTALS		0	0	0	1,258	Aug 2 PM		236,410	60,663		136,653
										(BLOCK LOAD)			

ZONE LOAD SUMMARY

Project Name	Date
Public Library Expansion	*5/8/2015*
System Name	Floor Area
New System	*2,909*

ZONE LOAD SUMMARY

		ZONAL SYSTEM						COOLING PEAK				HEATING PEAK	
ZONE NAME	SYSTEM NAME	Mult.	CFM	Sensible	Latent	Heating	OA CFM	Peak Hr	CFM	Sensible	Latent	CFM	Sensible
Conference/Chamber Zone 4		*1.0*					*1,454*	*Jul 3 PM*	*5,919*	*135,253*	*62,508*	*370*	*88,322*
						TOTALS	*0*	*0*	*0*	*1,454*	*Jul 3 PM*	*135,253*	*62,508*	*88,322*

(BLOCK LOAD)

PROJECT:

CITY OF IMPERIAL
PUBLIC LIBRARY EXPANSION

PREPARED BY:
VEXER ENGINEERING

ROBERTO C. MARTINEZ P.E.

CALIFORNIA RCE 74475
653 W MAIN ST. SUITE 103
EL CENTRO, CA 92243
760-352-8100

TABLE CONTENTS

Design Values..... 1

Load Tables..... 2

USGS Seismic Map Summary Report..... 3

USGS Seismic Map Detailed Report..... 4

Wind Analysis..... 7

Ground Morion Factors..... 9 Area 1

Seismic Resisting System Type..... 10 Area 1

CS Response Coefficient..... 11 Area 1

Base Shear..... 12 Area 1

Horizontal Diaphragms Design Values..... 13 Area 1

Shear Walls Design..... 14 Area 1

Shear Walls Tiedown ..... 15 Area 1

Shear Walls Deflection..... 16 Area 1

Load Tables..... 17 Area 2

Ground Morion Factors..... 18 Area 2

Seismic Resisting System Type..... 19 Area 2

CS Response Coefficient..... 20 Area 2

Base Shear..... 21 Area 2

Shear Walls Design..... 22 Area 2

Shear Walls Tiedown ..... 23 Area 2

Shear Walls Deflection..... 24 Area 2

TABLE CONTENTS CONT.....

Load Tables..... 25 Area 3

Ground Morion Factors..... 26 Area 3

Seismic Resisting System Type..... 27 Area 3

CS Response Coefficient..... 28 Area 3

Base Shear..... 29 Area 3

Shear Walls Design..... 30 Area 3

Shear Walls Tiedown ..... 31 Area 3

Shear Walls Deflection..... 32 Area 3

Load Tables..... 33 Area 4

Ground Morion Factors..... 34 Area 4

Seismic Resisting System Type..... 35 Area 4

CS Response Coefficient..... 36 Area 4

Base Shear..... 37 Area 4

Shear Walls Design..... 38 Area 4

Shear Walls Tiedown ..... 39 Area 4

Shear Walls Deflection..... 40 Area 4

Load Table (Gravitational Loads)..... 41

Headers Load Analysis..... 42

Headers Design..... 44

Footings Design..... 49

References..... 52

Design Values

Codes

California Building Code 2013 Edition
International Building Code 2012 Edition
American Society of Civil Engineers ASCE 7-10
American Concrete Institute 318-08

Soil

Soils Report By	Landmark
Project No:	LCI Project No 14210
Allowable Bearing Capacity:	2000 psf

Lateral Forces

Basic Wind Speed:	110 mph
Exposure Category:	C
Terrain:	Flat
Ss:	1.823
S1:	0.669
SDS:	1.00
Fa:	1.00
Fv:	1.50

Concrete

Foootings	4,500.00 psi
Slab	4,500.00 psi

Wood Members

2" to 4" thick, 2" and wider

No. 1	Fb =	1000 psi	Ft =	675 psi	Fv =	95 psi
	Fc =	1500 psi	E =	1,700,000.00 in		
No. 2	Fb =	875 psi	Ft =	575 psi	Fv =	95 psi
	Fc =	1350 psi	E =	1,600,000.00 in		
Stud	Fb =	700 psi	Ft =	450 psi	Fv =	95 psi
	Fc =	850 psi	E =	1,400,000.00 in		

Loads Table (Area 1)

1.- Roofing		10 psf
2.- 15/32" CDX Plywood Sheathing		1.5 psf
3.-Roof Framing		4 psf
4.-Insulation		1 psf
5.-5/8" gypsum wallboard ceiling		2.8 psf
6.- Hvca, elect & misc.		0.2 psf
	Dead Load=	**19.5 psf**
	Live Load =	**20 psf**

Exterior Walls

1.-1/2" Drywall		2.2 psf
2.-2"x6" Studs @ 16" o.c		1.7 psf
3.-Misc.		0.3 psf
4.-1/2" Plywood CDX		1.1 psf
5.-7/8" Stucco		10 psf
6.-R13 Insulation		0.2 psf
7.- 1/2" Dense Glass		1.9 psf
	Dead Load =	**17.4 psf**

Roof Area=		2908 sqft
Roof Weight =		**56706 lbs**
Walls Perimeter =		276 ft
Walls Height/2 =		8.75 ft
Walls Area =		2415 sqft
Walls Weight =		**42021 lbs**
	Weight =	99 k

USGS Design Maps Summary Report

User-Specified Input

Report Title 200 W 9TH T IMPERIAL, CA
Sun April 12, 2015 19:36:53 UTC

Building Code Reference Document 2012 International Building Code
(which utilizes USGS hazard data available in 2008)

Site Coordinates 32.84781°N, 115.57519°W

Site Soil Classification Site Class D – "Stiff Soil"

Risk Category I/II/III

USGS-Provided Output

S_S =	1.872 g	S_{MS} =	1.872 g	S_{DS} =	1.248 g
S_1 =	0.687 g	S_{M1} =	1.030 g	S_{D1} =	0.687 g

For information on how the SS and S1 values above have been calculated from probabilistic (risk-targeted) and deterministic ground motions in the direction of maximum horizontal response, please return to the application and select the "2009 NEHRP" building code reference document.

MCE_R Response Spectrum

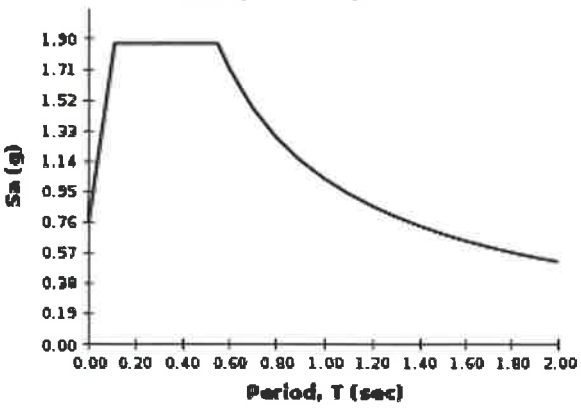

Design Response Spectrum

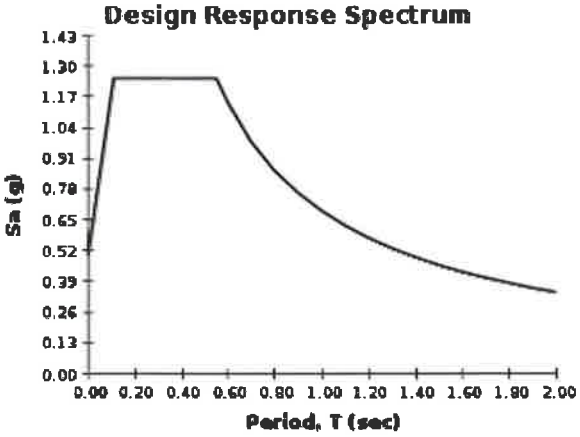

Although this information is a product of the U.S. Geological Survey, we provide no warranty, expressed or implied, as to the accuracy of the data contained therein. This tool is not a substitute for technical subject-matter knowledge.

USGS Design Maps Detailed Report

2012 International Building Code (32.84781°N, 115.57519°W)

Site Class D – "Stiff Soil", Risk Category I/II/III

Section 1613.3.1 — Mapped acceleration parameters

Note: Ground motion values provided below are for the direction of maximum horizontal spectral response acceleration. They have been converted from corresponding geometric mean ground motions computed by the USGS by applying factors of 1.1 (to obtain S_S) and 1.3 (to obtain S_1). Maps in the 2012 International Building Code are provided for Site Class B. Adjustments for other Site Classes are made, as needed, in Section 1613.3.3.

From Figure 1613.3.1(1) [1] S_S = 1.872 g

From Figure 1613.3.1(2) [2] S_1 = 0.687 g

Section 1613.3.2 — Site class definitions

The authority having jurisdiction (not the USGS), site-specific geotechnical data, and/or the default has classified the site as Site Class D, based on the site soil properties in accordance with Section 1613.

2010 ASCE-7 Standard – Table 20.3-1
SITE CLASS DEFINITIONS

Site Class	$\bar{v}_s$	$\bar{N}$ or $\bar{N}_{ch}$	$\bar{s}_u$
A. Hard Rock	>5,000 ft/s	N/A	N/A
B. Rock	2,500 to 5,000 ft/s	N/A	N/A
C. Very dense soil and soft rock	1,200 to 2,500 ft/s	>50	>2,000 psf
D. Stiff Soil	600 to 1,200 ft/s	15 to 50	1,000 to 2,000 psf
E. Soft clay soil	<600 ft/s	<15	<1,000 psf
	Any profile with more than 10 ft of soil having the characteristics: • Plasticity index PI > 20, • Moisture content w ≥ 40%, and • Undrained shear strength $\bar{s}_u$ < 500 psf		
F. Soils requiring site response analysis in accordance with Section 21.1	See Section 20.3.1		

For SI: 1ft/s = 0.3048 m/s 1lb/ft² = 0.0479 kN/m²

Section 1613.3.3 — Site coefficients and adjusted maximum considered earthquake spectral response acceleration parameters

TABLE 1613.3.3(1)
VALUES OF SITE COEFFICIENT F_a

Site Class	Mapped Spectral Response Acceleration at Short Period				
	$S_S \leq 0.25$	$S_S = 0.50$	$S_S = 0.75$	$S_S = 1.00$	$S_S \geq 1.25$
A	0.8	0.8	0.8	0.8	0.8
B	1.0	1.0	1.0	1.0	1.0
C	1.2	1.2	1.1	1.0	1.0
D	1.6	1.4	1.2	1.1	1.0
E	2.5	1.7	1.2	0.9	0.9
F	See Section 11.4.7 of ASCE 7				

Note: Use straight-line interpolation for intermediate values of S_S

For Site Class = D and S_S = 1.872 g, F_a = 1.000

TABLE 1613.3.3(2)
VALUES OF SITE COEFFICIENT F_v

Site Class	Mapped Spectral Response Acceleration at 1-s Period				
	$S_1 \leq 0.10$	$S_1 = 0.20$	$S_1 = 0.30$	$S_1 = 0.40$	$S_1 \geq 0.50$
A	0.8	0.8	0.8	0.8	0.8
B	1.0	1.0	1.0	1.0	1.0
C	1.7	1.6	1.5	1.4	1.3
D	2.4	2.0	1.8	1.6	1.5
E	3.5	3.2	2.8	2.4	2.4
F	See Section 11.4.7 of ASCE 7				

Note: Use straight-line interpolation for intermediate values of S_1

For Site Class = D and S_1 = 0.687 g, F_v = 1.500

Equation (16-37): $S_{MS} = F_a S_S = 1.000 \times 1.872 = 1.872$ g

Equation (16-38): $S_{M1} = F_v S_1 = 1.500 \times 0.687 = 1.030$ g

Section 1613.3.4 — Design spectral response acceleration parameters

Equation (16-39): $S_{DS} = ⅔\ S_{MS} = ⅔ \times 1.872 = 1.248$ g

Equation (16-40): $S_{D1} = ⅔\ S_{M1} = ⅔ \times 1.030 = 0.687$ g

Section 1613.3.5 — Determination of seismic design category

TABLE 1613.3.5(1)
SEISMIC DESIGN CATEGORY BASED ON SHORT-PERIOD (0.2 second) RESPONSE ACCELERATION

VALUE OF S_{DS}	RISK CATEGORY		
	I or II	III	IV
$S_{DS} < 0.167g$	A	A	A
$0.167g \le S_{DS} < 0.33g$	B	B	C
$0.33g \le S_{DS} < 0.50g$	C	C	D
$0.50g \le S_{DS}$	D	D	D

For Risk Category = I and S_{DS} = 1.248 g, Seismic Design Category = D

TABLE 1613.3.5(2)
SEISMIC DESIGN CATEGORY BASED ON 1-SECOND PERIOD RESPONSE ACCELERATION

VALUE OF S_{D1}	RISK CATEGORY		
	I or II	III	IV
$S_{D1} < 0.067g$	A	A	A
$0.067g \le S_{D1} < 0.133g$	B	B	C
$0.133g \le S_{D1} < 0.20g$	C	C	D
$0.20g \le S_{D1}$	D	D	D

For Risk Category = I and S_{D1} = 0.687 g, Seismic Design Category = D

Note: When S_1 is greater than or equal to 0.75g, the Seismic Design Category is **E** for buildings in Risk Categories I, II, and III, and **F** for those in Risk Category IV, irrespective of the above.

Seismic Design Category ≡ "the more severe design category in accordance with Table 1613.3.5(1) or 1613.3.5(2)" = D

Note: See Section 1613.3.5.1 for alternative approaches to calculating Seismic Design Category.

References

1. *Figure 1613.3.1(1)*: http://earthquake.usgs.gov/hazards/designmaps/downloads/pdfs/IBC-2012-Fig1613p3p1(1).pdf
2. *Figure 1613.3.1(2)*: http://earthquake.usgs.gov/hazards/designmaps/downloads/pdfs/IBC-2012-Fig1613p3p1(2).pdf

CONTENTS:

Wind Analysis for Low-rise Building, Based on ASCE 7-10 / IBC 2012 / CBC 2013

Area 1

INPUT DATA

Exposure category (B, C or D)			C	
Importance factor, pg 77, (0.87, 1.0 or 1.15)	I	=	1.00	Category I
Basic wind speed (IBC Tab 1609.3.1 V_{3S})	V	=	110	mph
Topographic factor (Sec.6.5.7.2, pg 26 & 45)	K_{zt}	=	1	Flat
Building height to eave	h_e	=	18.0	ft
Building height to ridge	h_r	=	18.0	ft
Building length	L	=	78	ft
Building width	B	=	30	ft
Effective area of components (or Solar Panel area)	A	=	0	ft^2

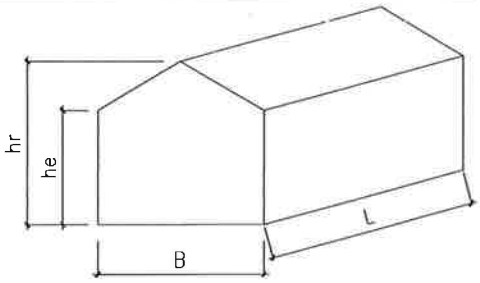

DESIGN SUMMARY

Max horizontal force normal to building length, L, face	=	23.32	kips
Max horizontal force normal to building length, B, face	=	9.51	kips
Max total horizontal torsional load	=	209.91	ft-kips
Max total upward force	=	41.42	kips

ANALYSIS

Velocity pressure

$q_h = 0.00256\ K_h\ K_{zt}\ K_d\ V^2\ I$ = **23.17** psf

where: q_h = velocity pressure at mean roof height, h. (Eq. 6-15, page 27)

K_h = velocity pressure exposure coefficient evaluated at height, h, (Tab. 6-3, Case 1,pg 79) = **0.88**

K_d = wind directionality factor. (Tab. 6-4, for building, page 80) = **0.85**

h = mean roof height = **18.00** ft

< 60 ft, [Satisfactory]

< Min (L, B), [Satisfactory]

Design pressures for MWFRS

$p = q_h\ [(G\ C_{pf})-(G\ C_{pi})]$

where: p = pressure in appropriate zone. (Eq. 6-18, page 28). p_{min} = **10** psf (Sec. 6.1.4.1 & 6.1.4.2)

$G\ C_{pf}$ = product of gust effect factor and external pressure coefficient, see table below. (Fig. 6-10, page 53 & 54)

$G\ C_{pi}$ = product of gust effect factor and internal pressure coefficient.(Fig. 6-5, Enclosed Building, page 47)

= **0.18** or **-0.18**

a = width of edge strips, Fig 6-10, note 9, page 54, MAX[MIN(0.1B, 0.1L, 0.4h), MIN(0.04B, 0.04L), 3] = **3.00** ft

Net Pressures (psf), Basic Load Cases

Surface	Roof angle θ = 0.00			Roof angle θ = 0.00		
	$G\ C_{pf}$	Net Pressure with $(+GC_{pi})$	Net Pressure with $(-GC_{pi})$	$G\ C_{pf}$	Net Pressure with $(+GC_{pi})$	Net Pressure with $(-GC_{pi})$
1	0.40	5.10	13.44	0.40	5.10	13.44
2	-0.69	-20.16	-11.82	-0.69	-20.16	-11.82
3	-0.37	-12.74	-4.40	-0.37	-12.74	-4.40
4	-0.29	-10.89	-2.55	-0.29	-10.89	-2.55
1E	0.61	9.96	18.30	0.61	9.96	18.30
2E	-1.07	-28.96	-20.62	-1.07	-28.96	-20.62
3E	-0.53	-16.45	-8.11	-0.53	-16.45	-8.11
4E	-0.43	-14.13	-5.79	-0.43	-14.13	-5.79
5	-0.45	-14.60	-6.26	-0.45	-14.60	-6.26
6	-0.45	-14.60	-6.26	-0.45	-14.60	-6.26

Net Pressures (psf), Torsional Load Cases

Surface	Roof angle θ = 0.00		
	$G\ C_{pf}$	Net Pressure with $(+GC_{pi})$	Net Pressure with $(-GC_{pi})$
1T	0.40	1.27	3.36
2T	-0.69	-5.04	-2.95
3T	-0.37	-3.19	-1.10
4T	-0.29	-2.72	-0.64

Surface	Roof angle θ = 0.00		
	$G\ C_{pf}$	Net Pressure with $(+GC_{pi})$	Net Pressure with $(-GC_{pi})$
1T	0.40	1.27	3.36
2T	-0.69	-5.04	-2.95
3T	-0.37	-3.19	-1.10
4T	-0.29	-2.72	-0.64

CONTENTS:

Wind Analysis for Low-rise Building, Based on ASCE 7-10 / IBC 2012 / CBC 2013

Area 2

INPUT DATA

Exposure category (B, C or D)			C	
Importance factor, pg 77, (0.87, 1.0 or 1.15)	I	=	1.00	Category I
Basic wind speed (IBC Tab 1609.3.1V_{3S})	V	=	110	mph
Topographic factor (Sec.6.5.7.2, pg 26 & 45)	K_{zt}	=	1	Flat
Building height to eave	h_e	=	18.0	ft
Building height to ridge	h_r	=	18.0	ft
Building length	L	=	25	ft
Building width	B	=	23.5	ft
Effective area of components (or Solar Panel area)	A	=	0	ft^2

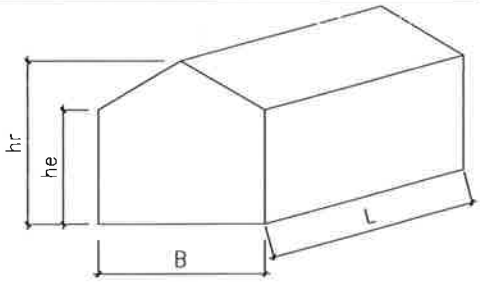

DESIGN SUMMARY

Max horizontal force normal to building length, L, face	=	8.07	kips
Max horizontal force normal to building length, B, face	=	7.64	kips
Max total horizontal torsional load	=	27.99	ft-kips
Max total upward force	=	10.60	kips

ANALYSIS

Velocity pressure

$q_h = 0.00256\ K_h\ K_{zt}\ K_d\ V^2\ I$ = **23.17** psf

where: q_h = velocity pressure at mean roof height, h. (Eq. 6-15, page 27)

K_h = velocity pressure exposure coefficient evaluated at height, h, (Tab. 6-3, Case 1,pg 79) = **0.88**

K_d = wind directionality factor. (Tab. 6-4, for building, page 80) = **0.85**

h = mean roof height = **18.00** ft

< 60 ft, [Satisfactory]

< Min (L, B), [Satisfactory]

Design pressures for MWFRS

$p = q_h\ [(G\ C_{pf})-(G\ C_{pi})]$

where: p = pressure in appropriate zone. (Eq. 6-18, page 28). p_{min} = **10** psf (Sec. 6.1.4.1 & 6.1.4.2)

$G\ C_{pf}$ = product of gust effect factor and external pressure coefficient, see table below. (Fig. 6-10, page 53 & 54)

$G\ C_{pi}$ = product of gust effect factor and internal pressure coefficient.(Fig. 6-5, Enclosed Building, page 47)

= **0.18** or **-0.18**

a = width of edge strips, Fig 6-10, note 9, page 54, MAX[MIN(0.1B, 0.1L, 0.4h), MIN(0.04B, 0.04L), 3] = **3.00** **ft**

Net Pressures (psf), Basic Load Cases

Surface	Roof angle θ = 0.00			Roof angle θ = 0.00		
	$G\ C_{pf}$	Net Pressure with $(+GC_{pi})$	Net Pressure with $(-GC_{pi})$	$G\ C_{pf}$	Net Pressure with $(+GC_{pi})$	Net Pressure with $(-GC_{pi})$
1	0.40	5.10	13.44	0.40	5.10	13.44
2	-0.69	-20.16	-11.82	-0.69	-20.16	-11.82
3	-0.37	-12.74	-4.40	-0.37	-12.74	-4.40
4	-0.29	-10.89	-2.55	-0.29	-10.89	-2.55
1E	0.61	9.96	18.30	0.61	9.96	18.30
2E	-1.07	-28.96	-20.62	-1.07	-28.96	-20.62
3E	-0.53	-16.45	-8.11	-0.53	-16.45	-8.11
4E	-0.43	-14.13	-5.79	-0.43	-14.13	-5.79
5	-0.45	-14.60	-6.26	-0.45	-14.60	-6.26
6	-0.45	-14.60	-6.26	-0.45	-14.60	-6.26

Net Pressures (psf), Torsional Load Cases

Surface	Roof angle θ = 0.00		
	$G\ C_{pf}$	Net Pressure with $(+GC_{pi})$	Net Pressure with $(-GC_{pi})$
1T	0.40	1.27	3.36
2T	-0.69	-5.04	-2.95
3T	-0.37	-3.19	-1.10
4T	-0.29	-2.72	-0.64

Surface	Roof angle θ = 0.00		
	$G\ C_{pf}$	Net Pressure with $(+GC_{pi})$	Net Pressure with $(-GC_{pi})$
1T	0.40	1.27	3.36
2T	-0.69	-5.04	-2.95
3T	-0.37	-3.19	-1.10
4T	-0.29	-2.72	-0.64

CONTENTS:

Wind Analysis for Low-rise Building, Based on ASCE 7-10 / IBC 2012 / CBC 2013 **Area 3**

INPUT DATA

Exposure category (B, C or D)		C	
Importance factor, pg 77, (0.87, 1.0 or 1.15)	I =	1.00	Category I
Basic wind speed (IBC Tab 1609.3.1V_{3S})	V =	110	mph
Topographic factor (Sec.6.5.7.2, pg 26 & 45)	K_{zt} =	1	Flat
Building height to eave	h_e =	18.0	ft
Building height to ridge	h_r =	18.0	ft
Building length	L =	17.16	ft
Building width	B =	13.25	ft
Effective area of components (or Solar Panel area)	A =	0	ft^2

DESIGN SUMMARY

Max horizontal force normal to building length, L, face	=	5.81 kips
Max horizontal force normal to building length, B, face	=	4.69 kips
Max total horizontal torsional load	=	13.95 ft-kips
Max total upward force	=	4.38 kips

ANALYSIS

Velocity pressure

$q_h = 0.00256\ K_h\ K_{zt}\ K_d\ V^2\ I$ = **23.17** psf

where: q_h = velocity pressure at mean roof height, h. (Eq. 6-15, page 27)

K_h = velocity pressure exposure coefficient evaluated at height, h, (Tab. 6-3, Case 1,pg 79) = **0.88**

K_d = wind directionality factor. (Tab. 6-4, for building, page 80) = **0.85**

h = mean roof height = **18.00** ft

< 60 ft, [Satisfactory]

Design pressures for MWFRS

$p = q_h\ [(G\ C_{pf}) - (G\ C_{pi})]$

where: p = pressure in appropriate zone. (Eq. 6-18, page 28). p_{min} = **10** psf (Sec. 6.1.4.1 & 6.1.4.2)

$G\ C_{pf}$ = product of gust effect factor and external pressure coefficient, see table below. (Fig. 6-10, page 53 & 54)

$G\ C_{pi}$ = product of gust effect factor and internal pressure coefficient.(Fig. 6-5, Enclosed Building, page 47)

= **0.18** or **-0.18**

a = width of edge strips, Fig 6-10, note 9, page 54, MAX[MIN(0.1B, 0.1L, 0.4h), MIN(0.04B, 0.04L), 3] = **3.00** **ft**

Net Pressures (psf), Basic Load Cases

Surface	Roof angle θ = 0.00			Roof angle θ = 0.00		
	$G\ C_{pf}$	Net Pressure with $(+GC_{pi})$	Net Pressure with $(-GC_{pi})$	$G\ C_{pf}$	Net Pressure with $(+GC_{pi})$	Net Pressure with $(-GC_{pi})$
1	0.40	5.10	13.44	0.40	5.10	13.44
2	-0.69	-20.16	-11.82	-0.69	-20.16	-11.82
3	-0.37	-12.74	-4.40	-0.37	-12.74	-4.40
4	-0.29	-10.89	-2.55	-0.29	-10.89	-2.55
1E	0.61	9.96	18.30	0.61	9.96	18.30
2E	-1.07	-28.96	-20.62	-1.07	-28.96	-20.62
3E	-0.53	-16.45	-8.11	-0.53	-16.45	-8.11
4E	-0.43	-14.13	-5.79	-0.43	-14.13	-5.79
5	-0.45	-14.60	-6.26	-0.45	-14.60	-6.26
6	-0.45	-14.60	-6.26	-0.45	-14.60	-6.26

Net Pressures (psf), Torsional Load Cases

Surface	Roof angle θ = 0.00		
	$G\ C_{pf}$	Net Pressure with $(+GC_{pi})$	Net Pressure with $(-GC_{pi})$
1T	0.40	1.27	3.36
2T	-0.69	-5.04	-2.95
3T	-0.37	-3.19	-1.10
4T	-0.29	-2.72	-0.64

Surface	Roof angle θ = 0.00		
	$G\ C_{pf}$	Net Pressure with $(+GC_{pi})$	Net Pressure with $(-GC_{pi})$
1T	0.40	1.27	3.36
2T	-0.69	-5.04	-2.95
3T	-0.37	-3.19	-1.10
4T	-0.29	-2.72	-0.64

CONTENTS:

Wind Analysis for Low-rise Building, Based on ASCE 7-10 / IBC 2012 / CBC 2013 **Area 4**

INPUT DATA

Exposure category (B, C or D)		C	
Importance factor, pg 77, (0.87, 1.0 or 1.15)	I =	1.00	Category I
Basic wind speed (IBC Tab 1609.3.1 V_{3S})	V =	110	mph
Topographic factor (Sec.6.5.7.2, pg 26 & 45)	K_{zt} =	1	Flat
Building height to eave	h_e =	18.0	ft
Building height to ridge	h_r =	18.0	ft
Building length	L =	23	ft
Building width	B =	7.33	ft
Effective area of components (or Solar Panel area)	A =	0	ft^2

DESIGN SUMMARY

Max horizontal force normal to building length, L, face	=	7.49	kips
Max horizontal force normal to building length, B, face	=	2.99	kips
Max total horizontal torsional load	=	24.09	ft-kips
Max total upward force	=	3.64	kips

ANALYSIS

Velocity pressure

$q_h = 0.00256\ K_h K_{zt} K_d V^2 I$ = **23.17** psf

where: q_h = velocity pressure at mean roof height, h. (Eq. 6-15, page 27)

K_h = velocity pressure exposure coefficient evaluated at height, h, (Tab. 6-3, Case 1,pg 79) = **0.88**

K_d = wind directionality factor. (Tab. 6-4, for building, page 80) = **0.85**

h = mean roof height = **18.00** ft

< 60 ft, [Satisfactory]

Design pressures for MWFRS

$p = q_h\ [(G\ C_{pf}) - (G\ C_{pi})]$

where: p = pressure in appropriate zone. (Eq. 6-18, page 28). p_{min} = **10** psf (Sec. 6.1.4.1 & 6.1.4.2)

$G\ C_{pf}$ = product of gust effect factor and external pressure coefficient, see table below. (Fig. 6-10, page 53 & 54)

$G\ C_{pi}$ = product of gust effect factor and internal pressure coefficient.(Fig. 6-5, Enclosed Building, page 47)

= **0.18** or **-0.18**

a = width of edge strips, Fig 6-10, note 9, page 54, MAX[MIN(0.1B, 0.1L, 0.4h), MIN(0.04B, 0.04L), 3] = **3.00** **ft**

Net Pressures (psf), Basic Load Cases

Surface	Roof angle θ = 0.00			Roof angle θ = 0.00		
	$G\ C_{pf}$	Net Pressure with $(+GC_{pi})$	Net Pressure with $(-GC_{pi})$	$G\ C_{pf}$	Net Pressure with $(+GC_{pi})$	Net Pressure with $(-GC_{pi})$
1	0.40	5.10	13.44	0.40	5.10	13.44
2	-0.69	-20.16	-11.82	-0.69	-20.16	-11.82
3	-0.37	-12.74	-4.40	-0.37	-12.74	-4.40
4	-0.29	-10.89	-2.55	-0.29	-10.89	-2.55
1E	0.61	9.96	18.30	0.61	9.96	18.30
2E	-1.07	-28.96	-20.62	-1.07	-28.96	-20.62
3E	-0.53	-16.45	-8.11	-0.53	-16.45	-8.11
4E	-0.43	-14.13	-5.79	-0.43	-14.13	-5.79
5	-0.45	-14.60	-6.26	-0.45	-14.60	-6.26
6	-0.45	-14.60	-6.26	-0.45	-14.60	-6.26

Net Pressures (psf), Torsional Load Cases

Surface	Roof angle θ = 0.00		
	$G\ C_{pf}$	Net Pressure with $(+GC_{pi})$	Net Pressure with $(-GC_{pi})$
1T	0.40	1.27	3.36
2T	-0.69	-5.04	-2.95
3T	-0.37	-3.19	-1.10
4T	-0.29	-2.72	-0.64

Surface	Roof angle θ = 0.00		
	$G\ C_{pf}$	Net Pressure with $(+GC_{pi})$	Net Pressure with $(-GC_{pi})$
1T	0.40	1.27	3.36
2T	-0.69	-5.04	-2.95
3T	-0.37	-3.19	-1.10
4T	-0.29	-2.72	-0.64

SEISMIC FORCES
ANALISIS

General

Occupancy per ASCE 7-10, page 2 Table 1.5-1 | II

Occupancy Importance Factor per ASCE 7-10, page 5 Table 1.5-2 | 1

Ground Motion

Ss = | 1.823

S1 = | 0.669

(Take it from : http://earthquake.usgs.gov/research/hazmaps/design/datasets/ 2003-zipcode-mcedata-SsS1.txt)

Site Class per CBC 2013 Table 20.3.1 | D | Shear wave velocity 600 to 1200 ft/sec.

)Site coefficient " Fa " | 1.000
per ASCE 7-10 page 66 Table 11.4-1

Site coefficient " Fv " | 1.500
per ASCE 7-10 page 66 Table 11.4-2

Maximum considered Earthquake Accelaration

SMS = Fa x Ss = | 1.823

SM1 = Fv x S_1 | 1.004
per ASCE 7-10 page 65 11.4.3

Design Spectral Accelaration

SDS = SMS x 2/3 | 1.215

SD1 = SM1 x 2/3 | 0.669
per ASCE 7-10 page 65 11.4.4

Seismic Design Category = | D | Per ASCE 7-10 page 67 Table 11.6.-1

SEISMIC FORCES
ANALISIS

Basic Seismic Force Resisting per ASCE 7-10 page 73 Table 12.2-1

Section	A

Bearing wall systems

Light- framed walls sheated w/wood structural panels rated for shear resistence or steel sheets.

Response Modification Coefficient "R"	6.50
System Overstrenght Factor "Wo"	3.00
Deflection Amplification "Cd"	4.00

SEISMIC FORCES
ANALISIS

Redundancy Factor

Redundancy Factor "p" — 1.3
per ASCE 7-05, page 125 12.3.4

Equivalent Lateral Force Method Per ASCE 7-10

Approx. fundamental period per Eq. 12.8-7

Structure Type per Table 12.8-2 — All other structures systems

Ct = — 0.02

x = — 0.75

hn = — 17.5

Ta = Ct x (hn^x) — 0.171

"Cs" Response coeffient per ASCE per 7-10 page 89 section 12.8

Short Period Design Spectral Response per ASCE 7-10 page 65 11.4.4	SDS	1.215
	SD1	0.669
Response modification factor per ASCE 7-10 page 89 table 12.2-1	R	6.50
Occupancy Importance factor per ASCE 7-10 page 5 Table 1.5-2	I	1.00

Cs per Eq 12.8-2

Cs = SDS/ (R / I) — 0.187

Cs need not to exceed :
Per Eq. 12.8.3 & 12.8.4

Cs = SD1/ T(R / I) for T < = TL — 0.601

Cs = SD1x TL/ T^2(R / I) for T > TL — 28.118

SEISMIC FORCES
ANALISIS

Long period transition per ASCE 7-10 22 - 15 ---- TL = 8

Cs minimum per Eq. 12.8-5 & 12.8-6

Cs shall not be less than 0.010

For structures located where S1 is equal to or greater than 0.6g Cs shall be not less than :

Cs = 0.5S1 / (R / I) 0.051

Cs Seismic Response Coefficient 0.187

Base Shear & Vertical Distribution

Equivalent Lateral Force Method per ASCE 7-10 page 89 section 12.8

Cs per 12.8.1.1 0.187

)W = 99 k

Seismic Base Shear V = Cs x W x 0.70 (ASD) 12.92 k

Vertical Distribution os Seismic Forces For North-South Direction

Level	Weight Wx (K)	Height Hx(ft)	WxHx (lb-ft)	WxHx/Sum WiHi (%)	Fx (K)
Roof	99	17.5	1728	100	12.92
			1728		

Horizontal Diaphragm Design Values

15/32" Thick CDX rated Sheathing
All edges supported
Nailed with 10d at:

a) 2" o.c. E.N. and B.N., F.N. at 12" o.c. (3x members required)

b) 2-1/2" o.c. E.N. and B.N., F.N. at 12" o.c. (3x members required)

c) 4" o.c. E.N. and B.N., F.N. at 12" o.c.

d) 6" o.c. E.N. and B.N., F.N. at 12" o.c.

e) 6" o.c. E.N. and B.N., F.N. at 12" o.c. (unblocked)

Shear Walls Design Values
Values from Table 11E, National Design Specifications

Shear wall	**S1**	**S2**	**S3**	**S4**
Shear wall capacity (#/ft)	349	430	550	870
Bolt diameter (in)	0.63	0.63	0.63	0.63
Spacing (in)	32	24	16	16
Sill plate thickness (in)	1.5	2.5	2.5	2.5
Min. embedment (in)	6	6	6	6
Capacity of bolt per NDS (#)	970	1180	1180	1180
Capacity (in #)	363.8	590	885	885

SHEAR WALL DESIGN BASED ON IBC 2009/CBC 2010/NDS 05

North-South Direction

Roof Area = 2908 sqft

Fx Total = 12.92 k + 25% (Force Increase Due to Structural Irregularities Structure) = 16.15 k

Fx = 5.55 psf

Shear Wall #	Tributary Area (sq.ft)	Tributary Fx (k)	Total Shear Wall Length (ft)	Actual Shear on Wall lb/ft	Sheathing 1 or 2 sides SW for Strong Wall	Panel Thickness or SW Type	Edge Nailing Spacing	Allowable Shear (plf)	Status
1	453.75	2520.28	12.00	210	One Side	15/32"	4	510	OK
2	592.75	3292.33	12.00	274	One Side	15/32"	4	510	OK
3	139.00	772.05	8.00	97	One Side	15/32"	4	510	OK
4	453.75	2520.28	12.00	210	One Side	15/32"	4	510	OK
5	992.75	5514.06	12.00	460	One Side	15/32"	4	510	OK
6	276.00	1532.99	8.00	192	One Side	15/32"	4	510	OK
SUM =	2908	16151.99	#						

East-South Direction

Roof Area = 2908 sqft

Fx Total = 12.92 k + 25% (Force Increase Due to Structural Irregularities Structure) = 16.15 k

Fx = 5.55 psf

Shear Wall #	Tributary Area (sq.ft)	Tributary Fx (k)	Total Shear Wall Length (ft)	Actual Shear on Wall lb/ft	Sheathing 1 or 2 sides SW for Strong Wall	Panel Thickness or SW Type	Edge Nailing Spacing	Allowable Shear (plf)	Status
7	280.75	1559.38	8.00	195	One Side	15/32"	4	510	OK
8	280.75	1559.378	12.00	130	One Side	15/32"	4	510	OK
9	1439.00	7992.680	16.00	500	One Side	15/32"	4	510	OK
10	907.50	5040.554	12.00	420	One Side	15/32"	2	630	OK
SUM =	2908.000	16151.99							

NOTES:

SHEAR CAPACITIES PER IBC Table 2306.3

TIEDOWN REQUIRED

North-South Direction

Fx Total = **16.15 k**

Shear Wall #	Tributary Shear (#)	Shear Wall Height (ft)	Shear Wall Length (ft)	Shear Wall Area (sqft)	Wall Weight (psf)	Resisting Moment	Overturning Mom (lbs)	Total Uplift (psf)	Simpson Strap	Capacity (lbs)	(Uplift/ Capacity) Ratio	Status
1	2520.28	10.00	12.00	120	17.4	2088	25203	1926	HDU5.SDS2.5	5645	0.341	OK
2	3292.33	10.00	12.00	120	17.4	2088	32923	2570	HDU5.SDS2.5	5645	0.455	OK
3	772.05	10.00	8.00	80	17.4	1392	7721	791	HDU5.SDS2.5	5645	0.140	OK
4	2520.28	10.00	12.00	120	17.4	2088	25203	1926	HDU5.SDS2.5	5645	0.341	OK
5	5514.06	10.00	12.00	120	17.4	2088	55141	4421	HDU5.SDS2.5	5645	0.783	Warning
6	1532.99	10.00	8.00	80	17.4	1392	15330	1742	HDU5.SDS2.5	5645	0.309	OK

SUM = 16152

TIEDOWN REQUIRED

North-South Direction

Fx Total = **16.15 k**

Shear Wall #	Tributary Shear (#)	Shear Wall Height (ft)	Shear Wall Length (ft)	Shear Wall Area (sqft)	Wall Weight (psf)	Resisting Moment	Overturning Mom. (lbs	Total Uplift (psf)	Use Simpson Strap	Capacity (lbs)	(Uplift/ Capacity) Ratio	Status
7	1559.38	10.00	8.00	80	15.5	1240	15594	1794	HDU5.SDS2.5	5645	0.318	OK
8	1559.38	10.00	12.00	120	15.5	1860	15594	1144	HDU5.SDS2.5	5645	0.203	OK
9	7992.68	10.00	16.00	160	15.5	2480	79927	4840	HDU5.SDS2.5	5645	0.857	Warning
10	5040.55	10.00	12.00	120	15.5	1860	50406	4045	HDU5.SDS2.5	5645	0.717	OK

SUM = 16152

SUM = 2304

SHEAR WALLS DEFLECTION PER IBC SECTION 2305.3

North-South Direction

Shear Wall #	Strength V (plf)	Shear Wall Height (ft)	A (sq in)	E (psi)	Gt (lb/in)	Lw (ft)	Vn (lb)	en (in)	da (in)	Δ (in)	Max Δ Allowable (in)	Status
1	357	10.00	30.25	1700000	27,000.00	12.00	89.26	0.00086	0.125	**0.247505**	3	OK
2	466	10.00	30.25	1700000	27,000.00	12.00	116.60	0.00207	0.125	**0.298494**	3	OK
3	164	10.00	30.25	1700000	27,000.00	8.00	41.02	0.00007	0.125	**0.22071**	3	OK
4	357	10.00	30.25	1700000	27,000.00	12.00	89.26	0.00086	0.125	**0.247505**	3	OK
5	781	10.00	30.25	1700000	27,000.00	12.00	195.29	0.01122	0.125	**0.487757**	3	OK
6	326	10.00	30.25	1700000	27,000.00	8.00	81.44	0.00064	0.125	**0.288031**	3	OK

East-West Direction

Shear Wall #	Strength V (plf)	Shear Wall Height (ft)	A (sq in)	E (psi)	Gt (lb/in)	Lw (ft)	Vn (lb)	en (in)	da (in)	Δ (in)	Max Δ Allowable (in)	Status
7	331	10.00	30.25	1700000	27,000.00	8.00	82.84	0.00068	0.125	**0.290492**	3	OK
8	221	10.00	30.25	1700000	27,000.00	12.00	55.23	0.00018	0.125	**0.190193**	3	OK
9	849	10.00	30.25	1700000	27,000.00	16.00	212.31	0.01475	0.125	**0.511544**	3	OK
10	714	10.00	30.25	1700000	27,000.00	12.00	178.52	0.00836	0.125	**0.440601**	3	OK

V = Shear in the wall in punds per linear foot

h = Hiegth from the bottom of the sill plate to the underside of the frami
at diaphragm level above (top plates)

A = Area of the boundary element in square inches

b= Shear wall length in feet

Gt = Rigidity through the thickness from IBC

Vn = Load per fastener (nail)

en = Nail slip values from IBC.

da= Vertical displacement of the tiedown due to anchorage details.

$$\Delta = \Delta_{Bending} + \Delta_{Shear} + \Delta_{Nail\ slip} + \Delta_{Chord\ splice\ slip} = \frac{8v_b h^3}{EAL_w} + \frac{v_b h}{Gt} + 0.75he_n + \frac{hd_a}{L_w}$$

Loads Table (Area 2)

1.- Roofing		10 psf
2.- 15/32" CDX Plywood Sheathing		1.5 psf
3.-Roof Framing		4 psf
4.-Insulation		1 psf
5.-5/8" gypsum wallboard ceiling		2.8 psf
6.- Hvca, elect & misc.		0.2 psf
	Dead Load=	**19.5 psf**
	Live Load =	**20 psf**

Exterior Walls

1.-1/2" Drywall		2.2 psf
2.-2"x6" Studs @ 16" o.c		1.7 psf
3.-Misc.		0.3 psf
4.-1/2" Plywood CDX		1.1 psf
5.-7/8" Stucco		10 psf
6.-R13 Insulation		0.2 psf
7.- 1/2" Dense Glass		1.9 psf
	Dead Load =	**17.4 psf**

Roof Area=		586 sqft
Roof Weight =		**11427 lbs**
Walls Perimeter =		97 ft
Walls Height/2 =		8.75 ft
Walls Area =		848.75 sqft
Walls Weight =		**14768 lbs**
	Weight =	26 k

SEISMIC FORCES
ANALISIS

General

Occupancy per ASCE 7-10, page 2 Table 1.5-1 | II

Occupancy Importance Factor per ASCE 7-10, page 5 Table 1.5-2 | 1

Ground Motion

Ss = | 1.823

S1 = | 0.669

(Take it from : http://earthquake.usgs.gov/research/hazmaps/design/datasets/ 2003-zipcode-mcedata-SsS1.txt)

Site Class per CBC 2013 Table 20.3.1 | D | Shear wave velocity 600 to 1200 ft/sec.

Site coefficient " Fa " | 1.000
per ASCE 7-10 page 66 Table 11.4-1

Site coefficient " Fv " | 1.500
per ASCE 7-10 page 66 Table 11.4-2

Maximum considered Earthquake Accelaration

SMS = Fa x Ss = | 1.823

SM1 = Fv x S1 | 1.004
per ASCE 7-10 page 65 11.4.3

Design Spectral Accelaration

SDS = SMS x 2/3 | 1.215

SD1 = SM1 x 2/3 | 0.669
per ASCE 7-10 page 65 11.4.4

Seismic Design Category = | D | Per ASCE 7-10 page 67 Table 11.6.-1

SEISMIC FORCES
ANALISIS

Basic Seismic Force Resisting per ASCE 7-10 page 73 Table 12.2-1

Section	A

Bearing wall systems

Light- framed walls sheated w/wood structural panels rated for shear resistence or steel sheets.

Response Modification Coefficient "R"	6.50
System Overstrenght Factor "Wo"	3.00
Deflection Amplification "Cd"	4.00

SEISMIC FORCES
ANALISIS

Redundancy Factor

Redundancy Factor "p" 1.3
per ASCE 7-05, page 125 12.3.4

Equivalent Lateral Force Method Per ASCE 7-10

Approx. fundamental period per Eq. 12.8-7

Structure Type per Table 12.8-2 All other structures systems

Ct = 0.02

x = 0.75

hn = 17.5

Ta = Ct x (hn^x) 0.171

"Cs" Response coeffient per ASCE per 7-10 page 89 section 12.8

Short Period Design Spectral Response per ASCE 7-10 page 65 11.4.4	SDS	1.215
	SD1	0.669
Response modification factor per ASCE 7-10 page 89 table 12.2-1	R	6.50
Occupancy Importance factor per ASCE 7-10 page 5 Table 1.5-2	I	1.00

Cs per Eq 12.8-2

Cs = SDS/ (R / I) 0.187

Cs need not to exceed :
Per Eq. 12.8.3 & 12.8.4
Cs = SD1/ T(R / I) for T < = TL 0.601

Cs = SD1x TL/ T^2(R / I) for T > TL 28.118

SEISMIC FORCES
ANALISIS

Long period transition per ASCE 7-10 22 - 15 ---- : TL = **8**

Cs minimum per Eq. 12.8-5 & 12.8-6

Cs shall not be less than **0.010**

For structures located where S1 is equal to or greater than 0.6g Cs shall be not less than :

Cs = 0.5S1 / (R / I) **0.051**

Cs Seismic Response Coefficient **0.187**

Base Shear & Vertical Distribution

Equivalent Lateral Force Method per ASCE 7-10 page 89 section 12.8

Cs per 12.8.1.1 **0.187**

W = **26** k

Seismic Base Shear V = Cs x W x 0.70 (ASD) **3.43** k

Vertical Distribution os Seismic Forces For North-South Direction

Level	Weight Wx (K)	Height Hx(ft)	WxHx (lb-ft)	WxHx/Sum WiHi (%)	Fx (K)
Roof	26	17.5	458.4	100	3.43
			458.4		

SHEAR WALL DESIGN BASED ON IBC 2009/CBC 2010/NDS 05

North-South Direction

Roof Area = 586 sqft

Fx Total = 3.43 k + 25% (Force Increase Due to Structural Irregularities Structure) = 4.29 k

Fx = 7.31 psf

Shear Wall #	Tributary Area (sq.ft)	Tributary Fx (k)	Total Shear Wall Length (ft)	Actual Shear on Wall lb/ft	Sheathing 1 or 2 sides SW for Strong Wall	Panel Thickness or SW Type	Edge Nailing Spacing	Allowable Shear (plf)	Status
1	586	4285.61	12.00	357	One Side	15/32"	4	510	OK
SUM =	2908	16151.99	#						

East-South Direction

Roof Area = 586 sqft

Fx Total = 3.43 k + 25% (Force Increase Due to Structural Irregularities Structure) = 4.29 k

Fx = 7.31 psf

Shear Wall #	Tributary Area (sq.ft)	Tributary Fx (k)	Total Shear Wall Length (ft)	Actual Shear on Wall lb/ft	Sheathing 1 or 2 sides SW for Strong Wall	Panel Thickness or SW Type	Edge Nailing Spacing	Allowable Shear (plf)	Status
2	586.00	4285.61	12.00	357	One Side	15/32"	4	510	OK
SUM =	586.000	4285.61	#						

NOTES:

SHEAR CAPACITIES PER IBC Table 2306.3

TIEDOWN REQUIRED

North-South Direction

Fx Total = 4.29 k

Shear Wall #	Tributary Shear (#)	Shear Wall Height (ft)	Shear Wall Length (ft)	Shear Wall Area (sqft)	Wall Weight (psf)	Resisting Moment	Overturning Mom (lbs)	Total Uplift (psf)	Simpson Strap	Capacity (lbs)	(Uplift/ Capacity) Ratio	Status
1	4285.61	10.00	12.00	120	17.4	2088	42856	3397	HDU5.SDS2.5	5645	0.602	OK

SUM = 4286

TIEDOWN REQUIRED

North-South Direction

Fx Total = 4.29 k

Shear Wall #	Tributary Shear (#)	Shear Wall Height (ft)	Shear Wall Length (ft)	Shear Wall Area (sqft)	Wall Weight (psf)	Resisting Moment	Overturning Mom. (lbs	Total Uplift (psf)	Use Simpson Strap	Capacity (lbs)	(Uplift/ Capacity) Ratio	Status
2	4285.61	10.00	12.00	120	15.5	1860	42856	3416	HDU5.SDS2.5	5645	0.605	OK

SUM = 4286

SUM = 6571

SHEAR WALLS DEFLECTION PER IBC SECTION 2305.3

North-South Direction

Shear Wall #	Strength V (plf)	Shear Wall Height (ft)	A (sq in)	E (psi)	Gt (lb/in)	Lw (ft)	Vn (lb)	en (in)	da (in)	Δ (in)	Max Δ Allowable (in)	Status
1	607	10.00	30.25	1700000	27,000.00	12.00	151.78	0.00491	0.125	0.37375	3	OK

East-West Direction

Shear Wall #	Strength V (plf)	Shear Wall Height (ft)	A (sq in)	E (psi)	Gt (lb/in)	Lw (ft)	Vn (lb)	en (in)	da (in)	Δ (in)	Max Δ Allowable (in)	Status
2	607	10.00	30.25	1700000	27,000.00	12.00	151.78	0.00491	0.125	0.37375	3	OK

V = Shear in the wall in punds per linear foot

h = Hiegth from the bottom of the sill plate to the underside of the frami
at diaphragm level above (top plates)

A = Area of the boundary element in square inches

b= Shear wall length in feet

Gt = Rigidity through the thickness from IBC

Vn = Load per fastener (nail)

en = Nail slip values from IBC.

da= Vertical displacement of the tiedown due to anchorage details.

$$\Delta = \Delta_{Bending} + \Delta_{Shear} + \Delta_{Nail\ slip} + \Delta_{Chord\ splice\ slip} = \frac{8v_b h^3}{EAL_w} + \frac{v_b h}{Gt} + 0.75he_n + \frac{hd_a}{L_w}$$

Loads Table (Area 3)

1.- Roofing		10 psf
2.- 15/32" CDX Plywood Sheathing		1.5 psf
3.-Roof Framing		4 psf
4.-Insulation		1 psf
5.-5/8" gypsum wallboard ceiling		2.8 psf
6.- Hvca, elect & misc.		0.2 psf
	Dead Load=	**19.5 psf**
	Live Load =	**20 psf**

Exterior Walls

1.-1/2" Drywall		2.2 psf
2.-2"x6" Studs @ 16" o.c		1.7 psf
3.-Misc.		0.3 psf
4.-1/2" Plywood CDX		1.1 psf
5.-7/8" Stucco		10 psf
6.-R13 Insulation		0.2 psf
7.- 1/2" Dense Glass		1.9 psf
	Dead Load =	**17.4 psf**

Roof Area=		169 sqft
Roof Weight =		**3295.5 lbs**
Walls Perimeter =		61 ft
Walls Height/2 =		8.75 ft
Walls Area =		533.75 sqft
Walls Weight =		**9287 lbs**
	Weight =	13 k

SEISMIC FORCES
ANALISIS

General

Occupancy per ASCE 7-10, page 2 Table 1.5-1 | II

Occupancy Importance Factor per ASCE 7-10, page 5 Table 1.5-2 | 1

Ground Motion

Ss = | 1.823

S1 = | 0.669

(Take it from : http://earthquake.usgs.gov/research/hazmaps/design/datasets/ 2003-zipcode-mcedata-SsS1.txt)

Site Class per CBC 2013 Table 20.3.1 | D | Shear wave velocity 600 to 1200 ft/sec.

Site coefficient " Fa " | 1.000
per ASCE 7-10 page 66 Table 11.4-1

Site coefficient " Fv " | 1.500
per ASCE 7-10 page 66 Table 11.4-2

Maximum considered Earthquake Accelaration

SMS = Fa x Ss = | 1.823

SM1 = Fv x S_1 | 1.004
per ASCE 7-10 page 65 11.4.3

Design Spectral Accelaration

SDS = SMS x 2/3 | 1.215

SD1 = SM1 x 2/3 | 0.669
per ASCE 7-10 page 65 11.4.4

Seismic Design Category = | D | Per ASCE 7-10 page 67 Table 11.6.-1

SEISMIC FORCES
ANALISIS

Basic Seismic Force Resisting per ASCE 7-10 page 73 Table 12.2-1

Section	A

Bearing wall systems

Light- framed walls sheated w/wood structural panels rated for shear resistence or steel sheets.

Response Modification Coefficient "R"	6.50
System Overstrenght Factor "Wo"	3.00
Deflection Amplification "Cd"	4.00

SEISMIC FORCES
ANALISIS

Redundancy Factor

Redundancy Factor "p" 1.3
per ASCE 7-05, page 125 12.3.4

Equivalent Lateral Force Method Per ASCE 7-10

Approx. fundamental period per Eq. 12.8-7

Structure Type per Table 12.8-2 All other structures systems

Ct = 0.02

x = 0.75

hn = 17.5

Ta = Ct x (hn^x) 0.171

"Cs" Response coeffient per ASCE per 7-10 page 89 section 12.8

Short Period Design Spectral Response per ASCE 7-10 page 65 11.4.4	SDS	1.215
	SD1	0.669
Response modification factor per ASCE 7-10 page 89 table 12.2-1	R	6.50
Occupancy Importance factor per ASCE 7-10 page 5 Table 1.5-2	I	1.00

Cs per Eq 12.8-2

Cs = SDS/ (R / I) 0.187

Cs need not to exceed :
Per Eq. 12.8.3 & 12.8.4
Cs = SD1/ T(R / I) for T < = TL 0.601

Cs = SD1x TL/ T^2(R / I) for T > TL 28.118

SEISMIC FORCES
ANALISIS

Long period transition per ASCE 7-10 22 - 15 ---- : TL = 8

Cs minimum per Eq. 12.8-5 & 12.8-6

Cs shall not be less than 0.010

For structures located where S1 is equal to or greater than 0.6g Cs shall be not less than :

Cs = 0.5S1 / (R / I) 0.051

Cs Seismic Response Coefficient 0.187

Base Shear & Vertical Distribution

Equivalent Lateral Force Method per ASCE 7-10 page 89 section 12.8

Cs per 12.8.1.1 0.187

W = 13 k

Seismic Base Shear V = Cs x W x 0.70 (ASD) 1.65 k

Vertical Distribution os Seismic Forces For North-South Direction

Level	Weight Wx (K)	Height Hx(ft)	WxHx (lb-ft)	WxHx/Sum WiHi (%)	Fx (K)
Roof	13	17.5	220.2	100	1.65
			220.2		

SHEAR WALL DESIGN BASED ON IBC 2009/CBC 2010/NDS 05

North-South Direction

Roof Area = 169 sqft

Fx Total = 1.65 k + 25% (Force Increase Due to Structural Irregularities Structure) = **2.06 k**

Fx = 12.18 psf

Shear Wall #	Tributary Area (sq.ft)	Tributary Fx (k)	Total Shear Wall Length (ft)	Actual Shear on Wall lb/ft	Sheathing 1 or 2 sides SW for Strong Wall	Panel Thickness or SW Type	Edge Nailing Spacing	Allowable Shear (plf)	Status
1	169	2058.57	6.00	343	One Side	15/32"	4	510	OK

SUM = 2908 16151.99 #

East-South Direction

Roof Area = 169 sqft

Fx Total = 1.65 k + 25% (Force Increase Due to Structural Irregularities Structure) = **2.06 k**

Fx = 12.18 psf

Shear Wall #	Tributary Area (sq.ft)	Tributary Fx (k)	Total Shear Wall Length (ft)	Actual Shear on Wall lb/ft	Sheathing 1 or 2 sides SW for Strong Wall	Panel Thickness or SW Type	Edge Nailing Spacing	Allowable Shear (plf)	Status
2	169.00	2058.57	6.00	343	One Side	15/32"	4	510	OK

SUM = 169.000 2058.57 #

NOTES:

SHEAR CAPACITIES PER IBC Table 2306.3

TIEDOWN REQUIRED

North-South Direction

Fx Total = 2.06 k

Shear Wall #	Tributary Shear (#)	Shear Wall Height (ft)	Shear Wall Length (ft)	Shear Wall Area (sqft)	Wall Weight (psf)	Resisting Moment	Overturning Mom (lbs)	Total Uplift (psf)	Simpson Strap	Capacity (lbs)	(Uplift/ Capacity) Ratio	Status
1	2058.57	10.00	6.00	60	17.4	1044	20586	3257	HDU5.SDS2.5	5645	0.577	OK

SUM = 2059

TIEDOWN REQUIRED

North-South Direction

Fx Total = 2.06 k

Shear Wall #	Tributary Shear (#)	Shear Wall Height (ft)	Shear Wall Length (ft)	Shear Wall Area (sqft)	Wall Weight (psf)	Resisting Moment	Overturning Mom. (lbs	Total Uplift (psf)	Use Simpson Strap	Capacity (lbs)	(Uplift/ Capacity) Ratio	Status
2	2058.57	10.00	6.00	60	15.5	930	20586	3276	HDU5.SDS2.5	5645	0.580	OK

SUM = 2059

SHEAR WALLS DEFLECTION PER IBC SECTION 2305.3

North-South Direction

Shear Wall #	Strength V (plf)	Shear Wall Height (ft)	A (sq in)	E (psi)	Gt (lb/in)	Lw (ft)	Vn (lb)	en (in)	da (in)	Δ (in)	Max Δ Allowable (in)	Status
1	583	10.00	30.25	1700000	27,000.00	6.00	145.82	0.00431	0.125	**0.471792**	3	**OK**

East-West Direction

Shear Wall #	Strength V (plf)	Shear Wall Height (ft)	A (sq in)	E (psi)	Gt (lb/in)	Lw (ft)	Vn (lb)	en (in)	da (in)	Δ (in)	Max Δ Allowable (in)	Status
2	583	10.00	30.25	1700000	27,000.00	6.00	145.82	0.00431	0.125	**0.471792**	3	**OK**

V = Shear in the wall in punds per linear foot

h = Hiegth from the bottom of the sill plate to the underside of the frami
at diaphragm level above (top plates)

A = Area of the boundary element in square inches

b= Shear wall length in feet

Gt = Rigidity through the thickness from IBC

Vn = Load per fastener (nail)

en = Nail slip values from IBC.

da= Vertical displacement of the tiedown due to anchorage details.

$$\Delta = \Delta_{Bending} + \Delta_{Shear} + \Delta_{Nail\ slip} + \Delta_{Chord\ splice\ slip} = \frac{8v_b h^3}{EAL_w} + \frac{v_b h}{Gt} + 0.75he_n + \frac{hd_a}{L_w}$$

Loads Table (Area 4)

1.- Roofing		10 psf
2.- 15/32" CDX Plywood Sheathing		1.5 psf
3.-Roof Framing		4 psf
4.-Insulation		1 psf
5.-5/8" gypsum wallboard ceiling		2.8 psf
6.- Hvca, elect & misc.		0.2 psf
	Dead Load=	**19.5 psf**
	Live Load =	**20 psf**

Exterior Walls

1.-1/2" Drywall		2.2 psf
2.-2"x6" Studs @ 16" o.c		1.7 psf
3.-Misc.		0.3 psf
4.-1/2" Plywood CDX		1.1 psf
5.-7/8" Stucco		10 psf
6.-R13 Insulation		0.2 psf
7.- 1/2" Dense Glass		1.9 psf
	Dead Load =	**17.4 psf**

Roof Area=		231 sqft
Roof Weight =		**4504.5 lbs**
Walls Perimeter =		63 ft
Walls Height/2 =		8.75 ft
Walls Area =		551.25 sqft
Walls Weight =		**9592 lbs**
	Weight =	14 k

SEISMIC FORCES
ANALISIS

General

Occupancy per ASCE 7-10, page 2 Table 1.5-1 | II

Occupancy Importance Factor per ASCE 7-10, page 5 Table 1.5-2 | 1

Ground Motion

Ss = | 1.823

S1 = | 0.669

(Take it from : http://earthquake.usgs.gov/research/hazmaps/design/datasets/
2003-zipcode-mcedata-SsS1.txt)

Site Class per CBC 2013 Table 20.3.1 | D | Shear wave velocity 600 to 1200 ft/sec.

Site coefficient " Fa " | 1.000
per ASCE 7-10 page 66 Table 11.4-1

Site coefficient " Fv " | 1.500
per ASCE 7-10 page 66 Table 11.4-2

Maximum considered Earthquake Accelaration

SMS = Fa x Ss = | 1.823

SM1 = Fv x S1 | 1.004
per ASCE 7-10 page 65 11.4.3

Design Spectral Accelaration

SDS = SMS x 2/3 | 1.215

SD1 = SM1 x 2/3 | 0.669
per ASCE 7-10 page 65 11.4.4

Seismic Design Category = | D | Per ASCE 7-10 page 67 Table 11.6.-1

SEISMIC FORCES
ANALISIS

Basic Seismic Force Resisting per ASCE 7-10 page 73 Table 12.2-1

Section	A

Bearing wall systems

Light- framed walls sheated w/wood structural panels rated for shear resistence or steel sheets.

Response Modification Coefficient "R"	6.50
System Overstrenght Factor "Wo"	3.00
Deflection Amplification "Cd"	4.00

SEISMIC FORCES
ANALISIS

Redundancy Factor

Redundancy Factor "p" per ASCE 7-05, page 125 12.3.4	1.3

Equivalent Lateral Force Method Per ASCE 7-10

Approx. fundamental period per Eq. 12.8-7

Structure Type per Table 12.8-2	All other structures systems	
Ct =		0.02
x =		0.75
hn =		17.5
Ta = Ct x (hn^x)		0.171

"Cs" Response coeffient per ASCE per 7-10 page 89 section 12.8

Short Period Design Spectral Response per ASCE 7-10 page 65 11.4.4	SDS	1.215
	SD1	0.669
Response modification factor per ASCE 7-10 page 89 table 12.2-1	R	6.50
Occupancy Importance factor per ASCE 7-10 page 5 Table 1.5-2	I	1.00

Cs per Eq 12.8-2

Cs = SDS/ (R / I)	0.187

Cs need not to exceed :
Per Eq. 12.8.3 & 12.8.4

Cs = SD1/ T(R / I)	for T < = TL	0.601
Cs = SD1x TL/ T^2(R / I)	for T > TL	28.118

SEISMIC FORCES
ANALISIS

Long period transition per ASCE 7-10 22 - 15 ---- : TL = **8**

Cs minimum per Eq. 12.8-5 & 12.8-6

Cs shall not be less than **0.010**

For structures located where S1 is equal to or greater than 0.6g Cs shall be not less than :

Cs = 0.5S1 / (R / I) **0.051**

Cs Seismic Response Coefficient **0.187**

Base Shear & Vertical Distribution

Equivalent Lateral Force Method per ASCE 7-10 page 89 section 12.8

Cs per 12.8.1.1 **0.187**

W = **14** k

Seismic Base Shear V = Cs x W x 0.70 (ASD) **1.84** k

Vertical Distribution os Seismic Forces For North-South Direction

Level	Weight Wx (K)	Height Hx(ft)	WxHx (lb-ft)	WxHx/Sum WiHi (%)	Fx (K)
Roof	14	17.5	246.7	100	1.84
			246.7		

SHEAR WALL DESIGN BASED ON IBC 2009/CBC 2010/NDS 05

North-South Direction

Roof Area = 231 sqft

Fx Total = 1.84 k + 25% (Force Increase Due to Structural Irregularities Structure) = 2.31 k

Fx = 9.98 psf

Shear Wall #	Tributary Area (sq.ft)	Tributary Fx (k)	Total Shear Wall Length (ft)	Actual Shear on Wall lb/ft	Sheathing 1 or 2 sides SW for Strong Wall	Panel Thickness or SW Type	Edge Nailing Spacing	Allowable Shear (plf)	Status
1	231	2306.18	6.00	384	One Side	15/32"	4	510	OK
SUM =	2908	2306.18	#						

East-South Direction

Roof Area = 231 sqft

Fx Total = 1.84 k + 25% (Force Increase Due to Structural Irregularities Structure) = 2.31 k

Fx = 9.98 psf

Shear Wall #	Tributary Area (sq.ft)	Tributary Fx (k)	Total Shear Wall Length (ft)	Actual Shear on Wall lb/ft	Sheathing 1 or 2 sides SW for Strong Wall	Panel Thickness or SW Type	Edge Nailing Spacing	Allowable Shear (plf)	Status
2	231.00	2306.18	6.00	384	One Side	15/32"	4	510	OK
SUM =	231.000	2306.18	#						

NOTES:

SHEAR CAPACITIES PER IBC Table 2306.3

TIEDOWN REQUIRED

North-South Direction

Fx Total = 2.31 k

Shear Wall #	Tributary Shear (#)	Shear Wall Height (ft)	Shear Wall Length (ft)	Shear Wall Area (sqft)	Wall Weight (psf)	Resisting Moment	Overturning Mom (lbs)	Total Uplift (psf)	Simpson Strap	Capacity (lbs)	(Uplift/ Capacity) Ratio	Status
1	2306.18	10.00	6.00	60	17.4	1044	23062	3670	HDU5.SDS2.5	5645	0.650	OK

SUM = 2306

TIEDOWN REQUIRED

North-South Direction

Fx Total = 2.31 k

Shear Wall #	Tributary Shear (#)	Shear Wall Height (ft)	Shear Wall Length (ft)	Shear Wall Area (sqft)	Wall Weight (psf)	Resisting Moment	Overturning Mom. (lbs	Total Uplift (psf)	Use Simpson Strap	Capacity (lbs)	(Uplift/ Capacity) Ratio	Status
2	2306.18	10.00	6.00	60	15.5	930	23062	3689	HDU5.SDS2.5	5645	0.653	OK

SUM = 2306

SHEAR WALLS DEFLECTION PER IBC SECTION 2305.3

North-South Direction

Shear Wall #	Strength V (plf)	Shear Wall Height (ft)	A (sq in)	E (psi)	Gt (lb/in)	Lw (ft)	Vn (lb)	en (in)	da (in)	Δ (in)	Max Δ Allowable (in)	Status
1	653	10.00	30.25	1700000	27,000.00	6.00	163.35	0.00625	0.125	**0.514162**	3	**OK**

East-West Direction

Shear Wall #	Strength V (plf)	Shear Wall Height (ft)	A (sq in)	E (psi)	Gt (lb/in)	Lw (ft)	Vn (lb)	en (in)	da (in)	Δ (in)	Max Δ Allowable (in)	Status
2	653	10.00	30.25	1700000	27,000.00	6.00	163.35	0.00625	0.125	**0.514162**	3	**OK**

V = Shear in the wall in punds per linear foot

h = Hiegth from the bottom of the sill plate to the underside of the frami
at diaphragm level above (top plates)

A = Area of the boundary element in square inches

b= Shear wall length in feet

Gt = Rigidity through the thickness from IBC

Vn = Load per fastener (nail)

en = Nail slip values from IBC.

da= Vertical displacement of the tiedown due to anchorage details.

$$\Delta = \Delta_{Bending} + \Delta_{Shear} + \Delta_{Nail\ slip} + \Delta_{Chord\ splice\ slip} = \frac{8v_b h^3}{EAL_w} + \frac{v_b h}{Gt} + 0.75he_n + \frac{hd_a}{L_w}$$

LOADS TABLE

Roof

1.- Roofing		10 psf
2.- 15/32" CDX Plywood Sheathing		1.5 psf
3.-Roof Framing		4 psf
4.-Insulation		1 psf
5.-5/8" gypsum wallboard ceiling		2.8 psf
6.- Hvca, elect & misc.		0.2 psf
	Dead Load =	**19.5 psf**
	Live Load =	**20 psf**

BEAM #1

Max. Span =	8.250	ft
Tributary Roof Length :	9.375	ft
Roof Dead Load =	19.500	ft
Roof Live Load =	20.000	ft
Total Dead Load =	182.813	lbs/ft
Total Live Load =	187.500	lbs/ft

BEAM #2

Max. Span =	3.000	ft
Tributary Roof Length :	9.375	ft
Roof Dead Load =	19.500	psf
Roof Live Load =	20.000	psf
Total Dead Load =	182.813	lbs/ft
Total Live Load =	187.500	lbs/ft

BEAM #3

Max. Span =	8.500	ft
Tributary Roof Length :	9.375	ft
Roof Dead Load =	19.500	psf
Roof Live Load =	20.000	psf
Total Dead Load =	182.813	lbs/ft
Total Live Load =	187.500	lbs/ft

Beam #4

Max. Span =	9.000	ft
Tributary Roof Length :	12.583	ft
Roof Dead Load =	19.500	psf
Roof Live Load =	20.000	psf
Total Dead Load =	245.375	lbs/ft
Total Live Load =	245.375	lbs/ft

Beam #5

Max. Span =	6.660	ft
Tributary Roof Length :	2.000	ft
Roof Dead Load =	19.500	psf
Roof Live Load =	20.000	psf
Total Dead Load =	39.000	lbs/ft
Total Live Load =	40.000	lbs/ft

Beam #6

Max. Span =	22.000	ft
Tributary Roof Length :	3.665	ft
Roof Dead Load =	19.500	psf
Roof Live Load =	20.000	psf
Total Dead Load =	71.468	lbs/ft
Total Live Load =	73.300	lbs/ft

DATA & DESIGN SUMMARY (BEAM #1)

MEMBER SIZE		6x8	
MEMBER SPAN	$L =$	8.25	ft
UNIFORMLY DISTRIBUTED DEAD LOAD	$w_D =$	0.1828	k / ft
UNIFORMLY DISTRIBUTED LIVE LOAD	$w_L =$	0.1875	k / ft
CONCENTRATED DEAD LOADS	$P_{D1} =$	0	lbs
(0 for no concentrated load)	$L_1 =$	0	ft
	$P_{D2} =$	0	lbs
	$L_2 =$	0	ft
DEFLECTION LIMIT OF LIVE LOAD	$\Delta_L = L / 360$		
DEFLECTION LIMIT OF LONG-TERM	$\Delta_{Kcr\,D+L} = L / 180$		

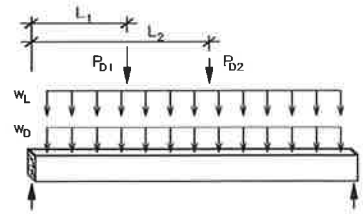

Camber => 0.35 inch
BEAM DESIGN IS ADEQUATE.

Does member have continuous lateral support by top diaphragm ?
(1= yes, 0= no) 1 Yes

Code	Duration Factor, C_D	Condition
1	0.90	Dead Load
2	1.00	Occupancy Live Load
3	1.15	Snow Load
4	1.25	Construction Load
5	1.60	Wind/Earthquake Load
6	2.00	Impact Load

Choice => 1 Dead Load

Code	Designation
1	Select Structural, Douglas Fir-Larch
2	No. 1, Douglas Fir-Larch
3	No. 2, Douglas Fir-Larch
4	Select Structural, Southern Pine
5	No. 1, Southern Pine
6	No. 2, Southern Pine

Choice => 1

ANALYSIS

DETERMINE REACTIONS, MOMENT, SHEAR

$w_{Self\ Wt} =$ 9 lbs / ft $R_{Left} =$ 1.53 kips $R_{Right} =$ 1.53 kips

$V_{Max} =$ 1.52 kips, at 7.5 inch from left end $M_{Max} =$ 3.15 ft-kip

DETERMINE SECTION PROPERTIES& ALLOWABLE STRESSES

b =	5.50	in	E'_{min} =	620	$E = E_x =$	1700	ksi		
d =	7.50	in	$F_{bE} =$	N/A	F_b =	1,550	psi		
A =	41.3	in^2	I =	###### in^4	F_v =	170	psi	F_b' =	1,395 psi
S_x =	51.563	in^3			E' =	1,700	ksi	F_v' =	153 psi

C_D	C_M	C_t	C_i	C_L	C_F	C_V	C_c	C_r
0.90	1.00	1.00	1.00	1.00	1.00	1.00	1.00	1.00

CHECK BENDING AND SHEAR CAPACITIES

$f_b = M_{Max} / S_x =$ 733 psi < $F_b =$ 1395 psi **[Satisfactory]**

$f_v' = 1.5\ V_{Max} / A =$ 55 psi < F_v' **[Satisfactory]**

CHECK DEFLECTIONS

$\Delta_{(L,\ Max)} =$ 0.000 in, at 4.125 ft from left end, < $\Delta_L = L / 360$ **[Satisfactory]**

$\Delta_{(Kcr\ D+L,\ Max)} =$ 0.12 in, at 4.388 ft from left end < $\Delta_{Kcr\,D+L} = L / 180$ **[Satisfactory]**

Where K_{cr} = 0.50 , (NDS 3.5.2)

DETERMINE CAMBER AT 1.5 (DEAD + SELF WEIGHT)

$\Delta_{(1.5D,\ Max)} =$ 0.35 in, at 4.388 ft from left end

DATA & DESIGN SUMMARY (BEAM #2)

MEMBER SIZE		6x6	
MEMBER SPAN	$L =$	3	ft
UNIFORMLY DISTRIBUTED DEAD LOAD	$w_D =$	0.1828	k / ft
UNIFORMLY DISTRIBUTED LIVE LOAD	$w_L =$	0.1875	k / ft
CONCENTRATED DEAD LOADS	$P_{D1} =$	0	lbs
(0 for no concentrated load)	$L_1 =$	0	ft
	$P_{D2} =$	0	lbs
	$L_2 =$	0	
DEFLECTION LIMIT OF LIVE LOAD	$\Delta_L = L / 360$		
DEFLECTION LIMIT OF LONG-TERM	$\Delta_{Kcr\,D+L} = L / 180$		

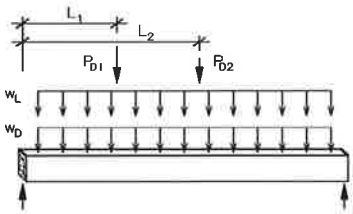

Camber => 0.87 inch
BEAM DESIGN IS ADEQUATE.

Does member have continuous lateral support by top diaphragm ?
(1= yes, 0= no) 1 Yes

Code	Duration Factor, C_D	Condition
1	0.90	Dead Load
2	1.00	Occupancy Live Load
3	1.15	Snow Load
4	1.25	Construction Load
5	1.60	Wind/Earthquake Load
6	2.00	Impact Load

Choice => 1 Dead Load

Code	Designation
1	Select Structural, Douglas Fir-Larch
2	No. 1, Douglas Fir-Larch
3	No. 2, Douglas Fir-Larch
4	Select Structural, Southern Pine
5	No. 1, Southern Pine
6	No. 2, Southern Pine

Choice => 1

ANALYSIS

DETERMINE REACTIONS, MOMENT, SHEAR

$w_{Self\ Wt} =$ 7 lbs / ft $R_{Left} =$ 0.56 kips $R_{Right} =$ 0.56 kips

$V_{Max} =$ 0.55 kips, at 5.5 inch from left end $M_{Max} =$ 0.42 ft-kip

DETERMINE SECTION PROPERTIES& ALLOWABLE STRESSES

b =	5.50	in	E'_{min} =	620	$E = E_x =$	1700	ksi			
d =	5.50	in	$F_{bE} =$	N/A	F_b =	1,550	psi			
A =	30.3	in^2	I =	76.255 in^4	F_v =	170	psi	F_b' =	1,395	psi
S_x =	27.729	in^3			E' =	1,700	ksi	F_v' =	153	psi

C_D	C_M	C_t	C_i	C_L	C_F	C_V	C_c	C_r
0.90	1.00	1.00	1.00	1.00	1.00	1.00	1.00	1.00

CHECK BENDING AND SHEAR CAPACITIES

$f_b = M_{Max} / S_x =$ 180 psi < $F_b =$ 1395 psi **[Satisfactory]**

$f_v' = 1.5\ V_{Max} / A =$ 27 psi < F_v' **[Satisfactory]**

CHECK DEFLECTIONS

$\Delta_{(L,\ Max)} =$ 0.000 in, at 1.500 ft from left end, < $\Delta_L = L / 360$ **[Satisfactory]**

$\Delta_{(Kcr\,D+L,\ Max)} =$ 0.15 in, at 5.000 ft from left end < $\Delta_{Kcr\,D+L} = L / 180$ **[Satisfactory]**

Where K_{cr} = 0.25 , (NDS 3.5.2)

DETERMINE CAMBER AT 1.5 (DEAD + SELF WEIGHT)

$\Delta_{(1.5D,\ Max)} =$ 0.87 in, at 5.000 ft from left end

DATA & DESIGN SUMMARY (BEAM #3)

MEMBER SIZE		6x8	
MEMBER SPAN	L =	8.5	ft
UNIFORMLY DISTRIBUTED DEAD LOAD	w_D =	0.1828	k / ft
UNIFORMLY DISTRIBUTED LIVE LOAD	w_L =	0.1875	k / ft
CONCENTRATED DEAD LOADS	P_{D1} =	0	lbs
(0 for no concentrated load)	L_1 =	0	ft
	P_{D2} =	0	lbs
	L_2 =	0	
DEFLECTION LIMIT OF LIVE LOAD	Δ_L = L / 360		
DEFLECTION LIMIT OF LONG-TERM	$\Delta_{Kcr\,D+L}$ = L / 180		

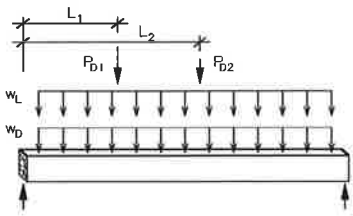

Camber => 0.72 inch
BEAM DESIGN IS ADEQUATE.

Does member have continuous lateral support by top diaphragm ?
(1= yes, 0= no) 1 Yes

Code	Duration Factor, C_D	Condition
1	0.90	Dead Load
2	1.00	Occupancy Live Load
3	1.15	Snow Load
4	1.25	Construction Load
5	1.60	Wind/Earthquake Load
6	2.00	Impact Load

Choice => 1 Dead Load

Code	Designation
1	Select Structural, Douglas Fir-Larch
2	No. 1, Douglas Fir-Larch
3	No. 2, Douglas Fir-Larch
4	Select Structural, Southern Pine
5	No. 1, Southern Pine
6	No. 2, Southern Pine

Choice => 1

ANALYSIS

DETERMINE REACTIONS, MOMENT, SHEAR

$w_{Self\ Wt}$ = 9 lbs / ft R_{Left} = 1.57 kips R_{Right} = 1.57 kips

V_{Max} = 1.57 kips, at 7.5 inch from left end M_{Max} = 3.34 ft-kip

DETERMINE SECTION PROPERTIES& ALLOWABLE STRESSES

b =	5.50	in	E'_{min} =	620	$E = E_x$ =	1700	ksi			
d =	7.50	in	F_{bE} =	N/A	F_b =	1,550	psi			
A =	41.3	in^2	I =	###### in^4	F_v =	170	psi	F_b' =	1,395	psi
S_x =	51.563	in^3			E' =	1,700	ksi	F_v' =	153	psi

C_D	C_M	C_t	C_i	C_L	C_F	C_V	C_c	C_r
0.90	1.00	1.00	1.00	1.00	1.00	1.00	1.00	1.00

CHECK BENDING AND SHEAR CAPACITIES

$f_b = M_{Max} / S_x$ = 778 psi < F_b = 1395 psi **[Satisfactory]**

$f_v' = 1.5\ V_{Max} / A$ = 57 psi < F_v' **[Satisfactory]**

CHECK DEFLECTIONS

$\Delta_{(L,\ Max)}$ = 0.000 in, at 4.250 ft from left end, < Δ_L = L / 360 **[Satisfactory]**

$\Delta_{(Kcr\,D+L,\ Max)}$ = 0.12 in, at 4.475 ft from left end < $\Delta_{Kcr\,D+L}$ = L / 180 **[Satisfactory]**

Where K_{cr} = 0.25 , (NDS 3.5.2)

DETERMINE CAMBER AT 1.5 (DEAD + SELF WEIGHT)

$\Delta_{(1.5D,\ Max)}$ = 0.72 in, at 4.475 ft from left end

DATA & DESIGN SUMMARY (BEAM #4)

MEMBER SIZE		6x10	
MEMBER SPAN	$L =$	9	ft
UNIFORMLY DISTRIBUTED DEAD LOAD	$w_D =$	0.2454	k / ft
UNIFORMLY DISTRIBUTED LIVE LOAD	$w_L =$	0.2454	k / ft
CONCENTRATED DEAD LOADS	$P_{D1} =$	0	lbs
(0 for no concentrated load)	$L_1 =$	0	ft
	$P_{D2} =$	0	lbs
	$L_2 =$	0	
DEFLECTION LIMIT OF LIVE LOAD	$\Delta_L = L /$	360	
DEFLECTION LIMIT OF LONG-TERM	$\Delta_{Kcr\,D+L} = L /$	180	

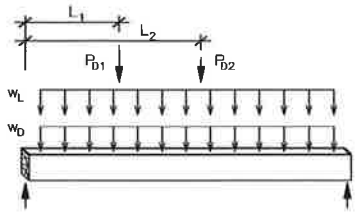

Camber => 0.69 inch
BEAM DESIGN IS ADEQUATE.

Does member have continuous lateral support by top diaphragm ?
(1= yes, 0= no) 1 Yes

Code	Duration Factor, C_D	Condition
1	0.90	Dead Load
2	1.00	Occupancy Live Load
3	1.15	Snow Load
4	1.25	Construction Load
5	1.60	Wind/Earthquake Load
6	2.00	Impact Load

Choice => 1 Dead Load

Code	Designation
1	Select Structural, Douglas Fir-Larch
2	No. 1, Douglas Fir-Larch
3	No. 2, Douglas Fir-Larch
4	Select Structural, Southern Pine
5	No. 1, Southern Pine
6	No. 2, Southern Pine

Choice => 1

ANALYSIS

DETERMINE REACTIONS, MOMENT, SHEAR

$w_{Self\,Wt} =$ 11 lbs / ft $R_{Left} =$ 2.21 kips $R_{Right} =$ 2.21 kips

$V_{Max} =$ 2.20 kips, at 9.5 inch from left end $M_{Max} =$ 4.97 ft-kip

DETERMINE SECTION PROPERTIES& ALLOWABLE STRESSES

b =	5.50	in	E'_{min} =	620	$E = E_x =$	1700	ksi			
d =	9.50	in	F_{bE} =	N/A	F_b =	1,550	psi			
A =	52.3	in^2	I =	###### in^4	F_v =	170	psi	F_b' =	1,395	psi
S_x =	82.729	in^3			E' =	1,700	ksi	F_v' =	153	psi

C_D	C_M	C_t	C_i	C_L	C_F	C_V	C_c	C_r
0.90	1.00	1.00	1.00	1.00	1.00	1.00	1.00	1.00

CHECK BENDING AND SHEAR CAPACITIES

$f_b = M_{Max} / S_x =$ 721 psi < $F_b =$ 1395 psi **[Satisfactory]**

$f_v' = 1.5\, V_{Max} / A =$ 63 psi < F_v' **[Satisfactory]**

CHECK DEFLECTIONS

$\Delta_{(L,\,Max)} =$ 0.000 in, at 4.500 ft from left end, < $\Delta_L = L / 360$ **[Satisfactory]**

$\Delta_{(Kcr\,D+L,\,Max)} =$ 0.46 in, at 4.650 ft from left end < $\Delta_{Kcr\,D+L} = L / 180$ **[Satisfactory]**

Where K_{cr} = 1.00 , (NDS 3.5.2)

DETERMINE CAMBER AT 1.5 (DEAD + SELF WEIGHT)

$\Delta_{(1.5D,\,Max)} =$ 0.69 in, at 4.650 ft from left end

DATA & DESIGN SUMMARY (BEAM #5)

MEMBER SIZE		6x6	
MEMBER SPAN	$L =$	6.66	ft
UNIFORMLY DISTRIBUTED DEAD LOAD	$w_D =$	0.0390	k / ft
UNIFORMLY DISTRIBUTED LIVE LOAD	$w_L =$	0.0400	k / ft
CONCENTRATED DEAD LOADS	$P_{D1} =$	0	lbs
(0 for no concentrated load)	$L_1 =$	0	ft
	$P_{D2} =$	0	lbs
	$L_2 =$	0	
DEFLECTION LIMIT OF LIVE LOAD	$\Delta_L = L / 360$		
DEFLECTION LIMIT OF LONG-TERM	$\Delta_{Kcr\,D+L} = L / 180$		

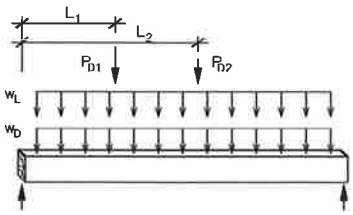

Camber => 0.34 inch
BEAM DESIGN IS ADEQUATE.

Does member have continuous lateral support by top diaphragm ?
(1= yes, 0= no) 1 Yes

Code	Duration Factor, C_D	Condition
1	0.90	Dead Load
2	1.00	Occupancy Live Load
3	1.15	Snow Load
4	1.25	Construction Load
5	1.60	Wind/Earthquake Load
6	2.00	Impact Load

Choice => 1 Dead Load

Code	Designation
1	Select Structural, Douglas Fir-Larch
2	No. 1, Douglas Fir-Larch
3	No. 2, Douglas Fir-Larch
4	Select Structural, Southern Pine
5	No. 1, Southern Pine
6	No. 2, Southern Pine

Choice => 1

ANALYSIS

DETERMINE REACTIONS, MOMENT, SHEAR

$w_{Self\,Wt} =$ 7 lbs / ft $R_{Left} =$ 0.26 kips $R_{Right} =$ 0.26 kips

$V_{Max} =$ 0.26 kips, at 5.5 inch from left end $M_{Max} =$ 0.44 ft-kip

DETERMINE SECTION PROPERTIES& ALLOWABLE STRESSES

b =	5.50	in	E'_{min} =	620	$E = E_x =$	1700	ksi		
d =	5.50	in	$F_{bE} =$	N/A	F_b =	1,550	psi		
A =	30.3	in^2	I =	76.255 in^4	F_v =	170	psi	F_b' =	1,395 psi
S_x =	27.729	in^3			E' =	1,700	ksi	F_v' =	153 psi

C_D	C_M	C_t	C_i	C_L	C_F	C_V	C_c	C_r
0.90	1.00	1.00	1.00	1.00	1.00	1.00	1.00	1.00

CHECK BENDING AND SHEAR CAPACITIES

$f_b = M_{Max} / S_x =$ 190 psi < $F_b =$ 1395 psi **[Satisfactory]**

$f_v' = 1.5\,V_{Max} / A =$ 13 psi < F_v' **[Satisfactory]**

CHECK DEFLECTIONS

$\Delta_{(L,\,Max)} =$ 0.000 in, at 3.330 ft from left end, < $\Delta_L = L / 360$ **[Satisfactory]**

$\Delta_{(Kcr\,D+L,\,Max)} =$ 0.34 in, at 3.664 ft from left end < $\Delta_{Kcr\,D+L} = L / 180$ **[Satisfactory]**

Where K_{cr} = 1.50 , (NDS 3.5.2)

DETERMINE CAMBER AT 1.5 (DEAD + SELF WEIGHT)

$\Delta_{(1.5D,\,Max)} =$ 0.34 in, at 3.664 ft from left end

DATA & DESIGN SUMMARY (BEAM #6)

MEMBER SIZE		6x14	
MEMBER SPAN	$L =$	22	ft
UNIFORMLY DISTRIBUTED DEAD LOAD	$w_D =$	0.0710	k / ft
UNIFORMLY DISTRIBUTED LIVE LOAD	$w_L =$	0.0730	k / ft
CONCENTRATED DEAD LOADS	$P_{D1} =$	0	lbs
(0 for no concentrated load)	$L_1 =$	0	ft
	$P_{D2} =$	0	lbs
	$L_2 =$	0	
DEFLECTION LIMIT OF LIVE LOAD	$\Delta_L = L / 360$		
DEFLECTION LIMIT OF LONG-TERM	$\Delta_{Kcr\,D+L} = L / 180$		

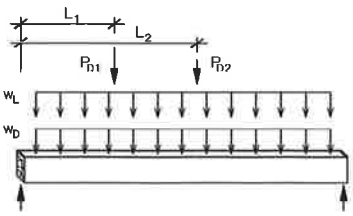

Camber => 0.83 inch
BEAM DESIGN IS ADEQUATE.

Does member have continuous lateral support by top diaphragm ?
(1= yes, 0= no) 1 Yes

Code	Duration Factor, C_D	Condition
1	0.90	Dead Load
2	1.00	Occupancy Live Load
3	1.15	Snow Load
4	1.25	Construction Load
5	1.60	Wind/Earthquake Load
6	2.00	Impact Load

Choice => 1 Dead Load

Code	Designation
1	Select Structural, Douglas Fir-Larch
2	No. 1, Douglas Fir-Larch
3	No. 2, Douglas Fir-Larch
4	Select Structural, Southern Pine
5	No. 1, Southern Pine
6	No. 2, Southern Pine

Choice => 1

ANALYSIS

DETERMINE REACTIONS, MOMENT, SHEAR

$w_{Self\ Wt} =$ 16 lbs / ft $R_{Left} =$ 1.58 kips $R_{Right} =$ 1.58 kips

$V_{Max} =$ 1.57 kips, at 13.5 inch from left end $M_{Max} =$ 8.71 ft-kip

DETERMINE SECTION PROPERTIES& ALLOWABLE STRESSES

b =	5.50	in	E'_{min} =	620	$E = E_x =$	1700	ksi		
d =	13.50	in	F_{bE} =	N/A	F_b =	1,550	psi		
A =	74.3	in^2	I =	####### in^4	F_v =	170	psi	F_b' =	1,377 psi
S_x =	167.063	in^3			E' =	1,700	ksi	F_v' =	153 psi

C_D	C_M	C_t	C_i	C_L	C_F	C_V	C_c	C_r
0.90	1.00	1.00	1.00	1.00	0.99	1.00	1.00	1.00

CHECK BENDING AND SHEAR CAPACITIES

$f_b = M_{Max} / S_x =$ 626 psi < $F_b =$ 1377 psi **[Satisfactory]**

$f_v' = 1.5\ V_{Max} / A =$ 32 psi < F_v' **[Satisfactory]**

CHECK DEFLECTIONS

$\Delta_{(L,\,Max)} =$ 0.000 in, at 11.000 ft from left end, < $\Delta_L = L / 360$ **[Satisfactory]**

$\Delta_{(Kcr\,D+L,\,Max)} =$ 0.83 in, at 9.900 ft from left end < $\Delta_{Kcr\,D+L} = L / 180$ **[Satisfactory]**

Where K_{cr} = 1.50 , (NDS 3.5.2)

DETERMINE CAMBER AT 1.5 (DEAD + SELF WEIGHT)

$\Delta_{(1.5D,\,Max)} =$ 0.83 in, at 9.900 ft from left end

Footing Design for Stud Bearing Wall Based on IBC / ACI 318-08

INPUT DATA & DESIGN SUMMARY

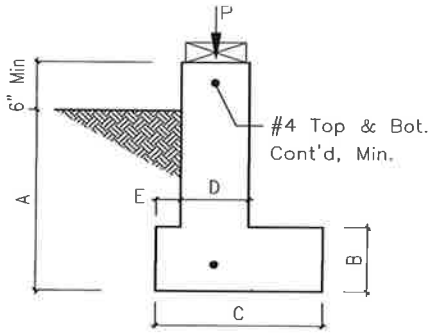

FOOTING SIZE	A	=	24	in
	B	=	6	in
	C	=	12	in
	D	=	12	in
	E	=	1	in
FOOTING CONCRETE STRENGTH	fc'	=	4.5	ksi
AXIAL DEAD LOAD (per linear foot)	P_{DL}	=	1.5	k / ft
AXIAL LIVE LOAD (per linear foot)	P_{LL}	=	0.6	k / ft
LATERAL LOAD (0=WIND, 1=SEISMIC)		=	1	Seismic,SD
LATERAL LOAD (per linear foot)	P_{LAT}	=	0.486	k / ft, SD
(holdown force converted to load per linear foot)				
SURCHARGE	q_s	=	0.1	ksf
SOIL WEIGHT	w_s	=	0.11	kcf
ALLOWABLE SOIL PRESSURE	Q_a	=	1.5	ksf

THE FOOTING DESIGN IS ADEQUATE.

ANALYSIS

DESIGN LOADS (IBC SEC.1605.3.2 & ACI 318-08 SEC.9.2.1)

CASE 1:	DL + LL	P	=	2.10	k / ft	1.2 DL + 1.6 LL	Pu	=	2.76	k / ft
CASE 2:	DL + LL + E / 1.4	P	=	2.45	k / ft	1.2 DL + 1.0 LL + 1.0 E	Pu	=	2.89	k / ft
CASE 3:	0.9 DL + E / 1.4	P	=	1.70	k / ft	0.9 DL + 1.0 E	Pu	=	1.84	k / ft

CHECK SOIL BEARING CAPACITY (ACI 318-08 SEC.15.2.2)

Service Loads	CASE 1	CASE 2	CASE 3	
P	2.10	2.45	1.70	k / ft
e	1.0	1.0	1.0	in (from center of footing)
q_s C	0.10	0.10	0.10	k / ft, (surcharge load)
$(0.15-w_s)$ Area	0.080	0.080	0.080	k / ft, (footing increased)
Σ P	2.3	2.6	1.9	k / ft
e	1.0	1.0	1.0	in
q_{max}	3.42	3.94	2.82	ksf
Q_a	1.50	1.50	1.50	ksf

Where [Satisfactory]

DESIGN FOR FLEXURE (ACI 318-08 SEC.22.5.1)

= 0.90 ft-kips / ft

where λ = 1.0 (ACI 318-08, Section 8.6.1)

ϕ = 0.6 (ACI 318-08, Section 9.3.5)

S = elastic section modulus of section

= 72 in^3 / ft

(cont'd)

FACTORED SOIL PRESSURE

Factored Loads	CASE 1	CASE 2	CASE 3	
P_u	2.76	2.89	1.84	k / ft
e_u	1.0	1.0	1.0	in (from center of footing)
$\gamma q_s C$	0.16	0.16	0.16	k / ft, (factored surcharge load)
γ[0.15AC - (0.15-Ws) (C-D) (A-B)]	0.36	0.36	0.36	k / ft, (factored footing & backfill loads)
ΣP_u	3.28	3.41	2.36	k / ft
e_u	0.9	0.9	0.9	in
E	1.0	1.0	1.0	in
$q_{u, max}$	3.28	3.41	2.36	ksf
$q_{u, VL}$	3.28	3.41	2.36	ksf
$q_{u, ML}$	2.98	3.38	2.35	ksf
$q_{u, MR}$	2.18	2.46	1.72	ksf
$q_{u, VR}$	1.68	1.88	1.33	ksf
$q_{u, min}$	1.68	1.88	1.33	ksf
$M_{u, L}$	0.00	0.00	0.00	ft-k / ft
$M_{u, R}$	0.00	0.00	0.00	ft-k / ft
$V_{u, L}$	0.00	0.00	0.00	k / ft
$V_{u, R}$	0.00	0.00	0.00	k / ft

$M_{u, max}$ = 0.15 ft-k / ft < ϕM_n [Satisfactory]

CHECK FLEXURE SHEAR (ACI 318-08 SEC.22.5.4)

= 2.88 k / ft

where ϕ = 0.6 (ACI 318-08, Section 9.3.5)

$V_{u, max}$ = 0.00 k / ft < ϕV_n [Satisfactory]

REFERENCES

California Building Code 2013 Edition

International Building Code 2012 Edition

American Society of Civil Engineers ASCE 7-10

Simpson Strong Tie Connectors

Truss Joist Manual

American Concrete Institute 318-08

Design of Wood Structures (Fifth Edition)

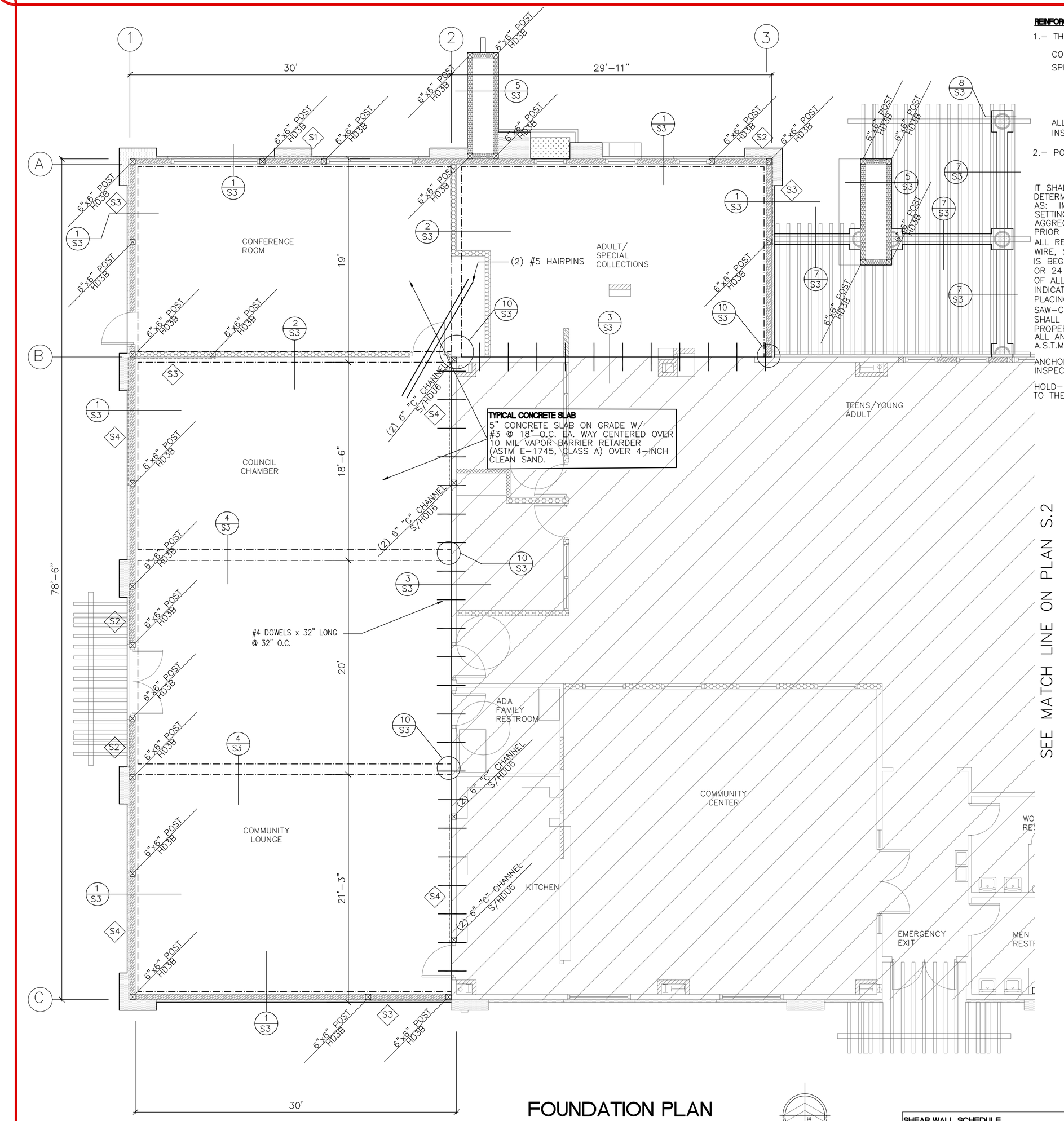

FOUNDATION PLAN

SCALE 3/16" = 1'-0"

REINFORCED CONCRETE NOTES:

1.– THE MINIMUM 28–DAY CYLINDER STRENGTH SHALL BE AS FOLLOWS, U.N.O.

CONCRETE ELEMENT	F'c
SPREAD/PAD FOOTINGS	2500 PSI

ALL CONCRETE REQUIRED TO BE MORE THAN 2500 PSI SHALL HAVE SPECIAL INSPECTION PER 2012 IBC 1705.3.

2.– PORTLAND CEMENT SHALL CONFORM TO ASTM C 150, TYPE I OR II

IT SHALL BE THE CONTRACTORS RESPONSIBILITY TO DETERMINE IF ANY SPECIAL ADMIXTURES ARE REQUIRED FOR THIS JOB FOR ITEMS SUCH AS: IMPROVE DURABILITY, WATER REDUCTION, RETARDING SETTING TIME, ACCELERATING SETTING TIME, TEMPERATURE CONTROL, ELIMINATE ADVERSE EFFECTS OF REACTIVE AGGREGATES, IMPROVE WORKABILITY, PROVIDE WATER TIGHTNESS OR PROVIDE EXPANSION PRIOR TO HARDENING.
ALL REINFORCING STEEL SHALL BE ADEQUATELY SUPPORTED BY CONCRETE CUBES W/ TIE WIRE, SPACERS, ETC. AND SHALL BE SECURELY TIED IN PLACE, BEFORE CONCRETE PLACING IS BEGUN. LAP SPLICE CONTINUOUS REINFORCING STEEL 40 BAR DIAMETERS IN CONCRETE, OR 24 INCHES, WHICH EVER IS GREATER. STAGGER ALL SPLICES. JOINTS: THE LOCATION OF ALL CONSTRUCTION, CONTROL AND WEAKENED PLANE JOINTS NOT SPECIFICALLY INDICATED ON THE DRAWINGS SHALL BE APPROVED BY THE ENGINEER PRIOR TO THE PLACING OF THE CONCRETE. CONTROL JOINTS SHALL BE TOOLED AT TIME OF POUR OR SAW–CUT (WITH A "SOFT CUT" SAW) IMMEDIATELY AFTER FINISHING THE SLAB. FOOTINGS SHALL EXTEND A MINIMUM OF 12 INCHES INTO FIRM UNDISTURBED NATURAL SOIL OR PROPERLY COMPACTED FILL.
ALL ANCHOR BOLTS SHALL BE GRADE "A" CONFORMING TO A.S.T.M. A–307

ANCHOR BOLTS SHALL BE SECURELY TIED IN PLACE PRIOR TO THE INSPECTING OR PLACING OF THE CONCRETE.

HOLD–DOWNS SHALL BE SECURELY NAILED TO THE FORMS PRIOR TO THE INSPECTING OF THE CONCRETE POUR.

BUILDING CODE CRITERIA

ALL WORK SHALL BE DONE IN ACCORDANCE WITH THE FOLLOWING CODES AS WELL AS FIRE CODES AND/OR LOCAL CODES AND ORDINANCES:

- 2013 CALIFORNIA BUILDING CODE (CBC)
- 2012 INTERNATIONAL BUILDING CODE (IBC)
- AMERICAN CONCRETE INSTITUTE (ACI)

GENERAL NOTES

SEQUENCES, PROCEDURES, OR FOR SAFETY PRECAUTIONS AND PROGRAMS OR FOR THE CONTRACTORS FAILURE TO PERFORM THE WORK IN ACCORDANCE WITH THE CONTRACT DOCUMENTS.
THE ENGINEER SHALL NOT BE RESPONSIBLE FOR THE ACTS OF OMISSIONS OF THE CONTRACTOR OR ANY SUBCONTRACTOR OR FOR ANY OF THE WORK AGENTS OR EMPLOYEES OR ANY OTHER PERSON PERFORMING ANY OF THE WORK.
IT SHALL BE THE RESPONSIBILITY OF THE CONTRACTOR TO ADEQUATELY SUPPORT ALL WALLS, TRUSSES, ETC. DURING CONSTRUCTION. THE CONTRACTOR SHALL DESIGN, CONSTRUCT AND MAINTAIN ALL SAFETY DEVICES, INCLUDING SHORING AND BRACING AND SHALL BE SOLELY RESPONSIBLE FOR CONFORMING TO ALL LOCAL, STATE AND FEDERAL SAFETY AND HEALTH STANDARDS, LAWS AND REGULATIONS.
THE CONTRACTOR SHALL VERIFY ALL DIMENSIONS, ELEVATIONS AND SITE CONDITIONS BEFORE STARTING WORK, AND SHALL NOTIFY THE ENGINEER IMMEDIATELY OF ANY DISCREPANCIES.
NOTES AND DETAILS ON THE DRAWINGS SHALL TAKE PRECEDENCE OVER THESE GENERAL NOTES, IN CASE OF CONFLICT.
WHERE NO CONSTRUCTION DETAILS ARE SHOWN OR NOTED FOR ANY PART OF THE WORK, SUCH DETAILS SHALL BE THE SAME AS FOR SIMILAR WORK SHOWN ON THE DRAWINGS.
SHOULD DISCREPANCIES OCCUR ON THESE PLANS, THE CONTRACTOR SHALL NOTIFY THE ENGINEER IMMEDIATELY.
THESE DRAWINGS ARE NOT TO BE SCALED FOR DIMENSIONAL INFORMATION. ACTUAL DIMENSION NUMBERS SHOWN ON THE PLANS ARE TO BE USED. IF DIMENSIONAL CONFLICTS EXIST, NOTIFY THE ENGINEER IMMEDIATELY. ANY CONTRACTOR SCALING DRAWINGS FOR ANY PURPOSE, DOES SO AT HIS OWN RISK AND IS RESPONSIBLE FOR ANY ERRORS AND MISTAKES WHICH MAY RESULT.

2013 CALIFORNIA BUILDING CODE (CBC) + ASCE 7-10 SEISMIC PARAMETERS

SITE CLASS = D
RISK CATEGORY = II
SEISMIC DESIGN CATEGORY = D

MAPPED MCE SHORT PERIOD SPECTRAL RESPONSE Ss = 1.82 g
MAPPED MCE 1 SECOND SPECTRAL RESPONSE S1 =0.669 g
SHORT PERIOD (0.2s) SITE COEFFICIENT Fa = 1.00
LONG PERIOD (1.0s) SITE COEFFICIENT Fv = 1.50
MCE SPECTRAL RESPONSE ACCELERATION PARAMETER (0.2s) SMS =1.823 g
MCE SPECTRAL RESPONSE ACCELERATION PARAMETER (1.0s) SM1 =1.004 g
DESIGN SPECTRAL RESPONSE ACCELERATION PARAMETER (0.2s) SDs =1.215 g
DESIGN SPECTRAL RESPONSE ACCELERATION PARAMETER (1.0s) SD1 =0.669 g
ALLOWABLE SOIL BEARING PRESSURE = 2000 PSF

BUILDING PAD PREPARATION AS PER SOILS REPORT LCI REPORT No LEI4210

THE EXPOSED SURFACE SOIL WITHIN THE BUILDING PAD/FOUNDATION AREA SHOULD BE REMOVED TO 3 FEET BELOW THE BUILDING PAD ELEVATION OR EXISTING NATURAL SURFACE GRADE (WHICHEVER IS LOWER) EXTENDING FIVE FEET BEYOND ALL EXTERIOR WALL/COLUMN LINES (INCLUDING CONCRETED AREAS ADJACENT TO THE BUILDING).

AN ENGINEERED BUILDING SUPPORT PAD CONSISTING OF 3.0 FEET OF GRANULAR SOIL PLACED IN MAXIMUM 8 INCH LIFTS (LOOSE), COMPACTED TO A MINIMUM OF 90% OF ASTM D1557 MAXIMUM DENSITY AT 2% BELOW TO 4% ABOVE OPTIMUM MOISTURE, SHOULD BE PLACE BELOW THE BOTTOM OF ALL STRUCTURAL SLABS AND 2 FEET OF GRANULAR SOIL BELOW SITE HARDSCAPE AREAS.

DESIGN LOADS:

ROOF DEAD LOAD=19 PSF
ROOF LIVE LOAD =20 PSF

ANCHORAGE SYSTEM

SOLE PLATE ANCHORS ARE TO BE 5/8"øx12" LONG A–307 BOLTS W/ 3"x3"x1/4" PLATE WASHER, MINIMUM CONCRETE EMBEDMENT OF 7" & LOCATED NOT LESS THAN 4" AND NOT MORE THAN 12" FROM PLATE END.

OR ADDED AT JOINTS IN PLATES. TITEN REQUIRES A MINIMUM OF 4–1/8" EMBEDMENT

PARTITION WALL NOTES:

ALL NEW PARTITION WALLS TO RECIEVE 3" HILTI "XZ–F DRIVE PIN I.C.B.O. # 1290 AT 32" CC (TYP.) AT INTERIOR NON–BEARING WALLS – 1" MIN. FROM EDGE OF BASE PLATE / 6" MIN. FROM END OF WALL

A 10–MIL POLYETHYLENE OR APPROVED VAPOR RETARDER WITH JOINTS LAPPED NOT LESS THAN 6" SHALL BE PLACED BETWEEN THE CONCRETE FLOOR SLAB AND THE BASE COURSE OR THE PREPARED SUBGRADE WHERE NO BASE COURSE EXISTS. (EXCEPTIONS : DETACHED GARAGES, UTILITY BUILDINGS AND OTHER UNHEATED ACCESSORY STRUCTURES.)

CONTRACTOR RESPONSIBILITY . EACH CONTRACTOR OR SUBCONTRACTOR IS RESPONSABLE FOR THE CONSRUCTION OF THE WIND AND/OR SEISMIC RESISTING SYSTEM THAT IS LISTED IN THE STATEMENT OF SPECIAL INSPECTIONS AND SHALL SUBMIT A WRITTEN STATEMENT OF RESPONSIBLITY TO THE BUILDING OFFICIAL AND THE OWNER PRIOR TO THE COMMENCEMENT OF WORK REQUIRING SPECIAL INSPECTION.

SHEAR WALL SCHEDULE

SYMBOL	SHEAR WALL THICKNESS/ PANEL GRADE	SHEAR WALL LENGTH (FT)	SHEAR WALL EDGE NAILING (E.N)	END STUDS (PANEL JTS.) MIN., U.N.O.	5/8" DIA. (U.N.O.) ANCHOR BOLTS (3) (S)	SILL PLATE
S1	15/32" STRUC–1	6'–0"	8d AT 6" O.C.	2x DFL	32" O.C.	2x PTDF
S2	15/32" STRUC–1	6'–0"	8d AT 4" O.C.	3x DFL	24" O.C.	3x PTDF
S3	15/32" STRUC–1	8'–0"	8d AT 3" O.C. STAGGERED	3x DFL	24" O.C.	3x PTDF
S4	15/32" STRUC–1	12'–0"	10d AT 2" O.C. STAGGERED	4x DFL	16" O.C.	3x PTDF

NOTE:
1.– SHEAR WALL NAILING APPLIES TO STUDS TOP & BOTTOM PLATES & BLOCKING, U.N.O., FIELD NAILING FOR SHEATHING TO BE 10" O.C.
2.– USE COMMON WIRE NAILS, U.N.O.
3.– PROVIDE 8" MINIMUM EMBEDMENT FOR ANCHOR BOLTS
4.– ALL PANEL EDGES SHALL BE BLOCKED
5.– PROVIDE SQUARE STEEL PLATE WASHERS OF MINIMUM 3"x3" EACH WOOD PLATE OR SILL PLATE BOLT.

IN ADDITION TO THE REGULAR INSPECTIONS, THE FOLLOWING CHECKED ITEMS ALSO REQUIRE SPECIAL INSPECTION IN ACCORDANCE WITH SECTION 1704.3 AND TABLE 1704.4 OF THE IBC.

ITEM	REQUIRED	REMARKS	CONTINUOUS
WELDING	NO		
MASONRY CONSTRUCTION	NO		
WOOD CONSTRUCTION	YES	NAILING, BOLTING, ANCHORING, SHEAR WALLS.	PERIODIC
CONCRETE CONSTRUCTION	YES	MAT.VERIFICATION, REINFORCING STEEL, BOLTING.	PERIODIC
SOILS COMPLIANCE PRIOR TO FOUNDATION INSPECTION	YES		
STRUCTURAL CONCRETE TILT–UP PANELS OVER 2500 PSI	NO		
EPOXY ANCHOR INSTALLATION	YES	THREADED RODS ON EXISTING FOOTINGS	PERIODIC
FOUNDATIONS	YES		
OTHER	NO		

SHEET: 1 OF: 9
DWN. BY: J.F.
REV. BY: R.M.
APP. BY: O.M.

LIBRARY EXPANSION PROJECT
FOUNDATION PLAN

IN THE CITY OF IMPERIAL, CALIFORNIA
DATE: 04/24/15

S1

SEAL:

BY: ROBERTO C. MARTINEZ
653 W. MAIN ST. SUITE 103
EL CENTRO, CA 92243
DATE: 4/24/2015
R.C.E. NO. C–74475

REVISIONS

NO.	DESCRIPTION:	DATE:	BY:
△			
△			
△			

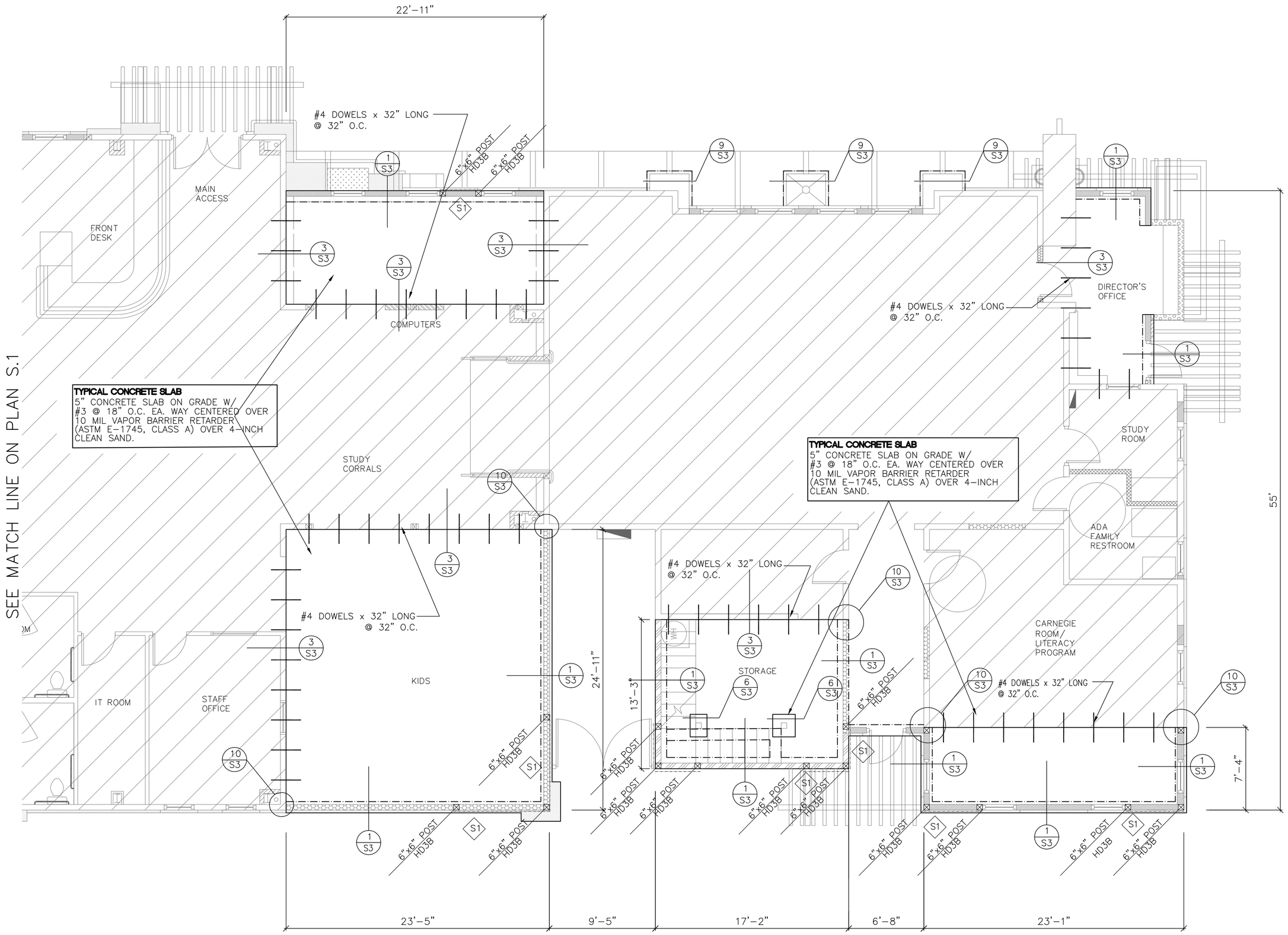

FOUNDATION PLAN

SCALE 3/16" = 1'-0"

SHEAR WALL SCHEDULE

SYMBOL	SHEAR WALL THICKNESS/ PANEL GRADE	SHEAR WALL EDGE NAILING (E.N)	END STUDS (PANEL JTS.) MIN., U.N.O.	5/8" DIA. (U.N.O.) ANCHOR BOLTS (3) (5)	SILL PLATE
S1	15/32" STRUC-1	8d AT 6" O.C.	2x DFL	32" O.C.	2x PTDF
S2	15/32" STRUC-1	8d AT 4" O.C.	3x DFL	24" O.C.	3x PTDF
S3	15/32" STRUC-1	8d AT 3" O.C. STAGGERED	3x DFL	24" O.C.	3x PTDF
S4	15/32" STRUC-1	10d AT 2" O.C. STAGGERED	4x DFL	16" O.C.	3x PTDF

NOTE:
1.- SHEAR WALL NAILING APPLIES TO STUDS TOP & BOTTOM PLATES & BLOCKING, U.N.O., FIELD NAILING FOR SHEATHING TO BE 10" O.C.
2.- USE COMMON WIRE NAILS, U.N.O.
3.- PROVIDE 8" MINIMUM EMBEDMENT FOR ANCHOR BOLTS
4.- ALL PANEL EDGES SHALL BE BLOCKED
5.- PROVIDE SQUARE STEEL PLATE WASHERS OF MINIMUM 3"x3" EACH WOOD PLATE OR SILL PLATE BOLT.

SHEET: 2 OF: 9
DWN. BY: J.F.
REV. BY: R.M.
APP. BY: O.M.

LIBRARY EXPANSION PROJECT
FOUNDATION PLAN
IN THE CITY OF IMPERIAL, CALIFORNIA
DATE: 04/24/15

S2

SEAL: PROFESSIONAL ENGINEER REGISTERED CIVIL STATE OF CALIFORNIA No. C-74475

BY: ROBERTO C. MARTINEZ
653 W. MAIN ST. SUITE 103
EL CENTRO, CA 92243
DATE: 04/24/2015
R.C.E. NO. C-74475

REVISIONS

NO.	DESCRIPTION:	DATE:	BY:
△			
△			
△			

City of Imperial California

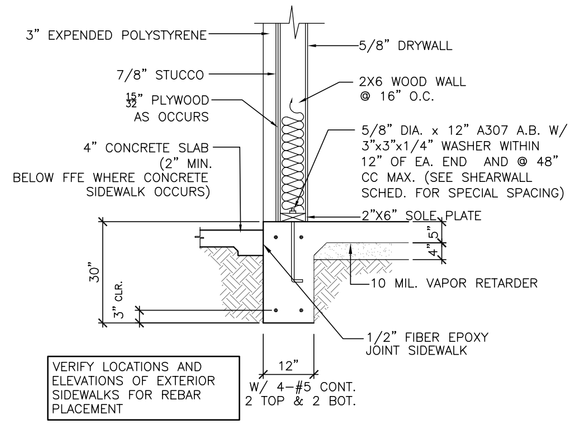

1 PERIM. FTG.
SCALE: 1/2"=1'-0"

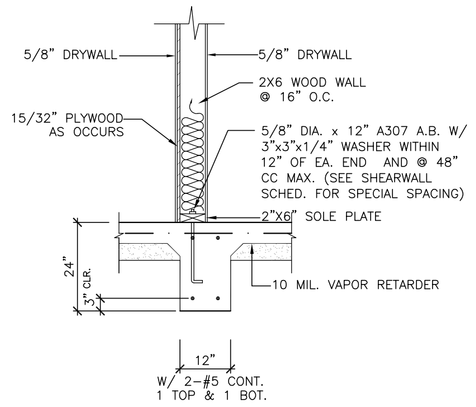

2 INTERIOR FTG.
SCALE: 1/2"=1'-0"

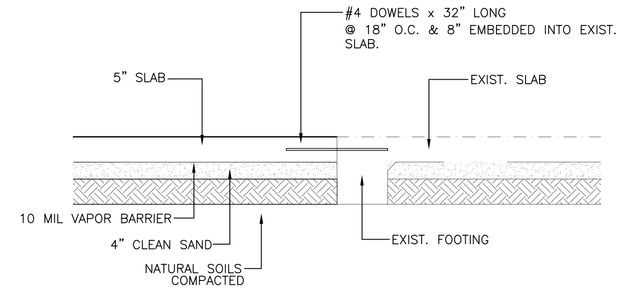

3 NEW SLAB/EXIST. FOOTING
NOT TO SCALE

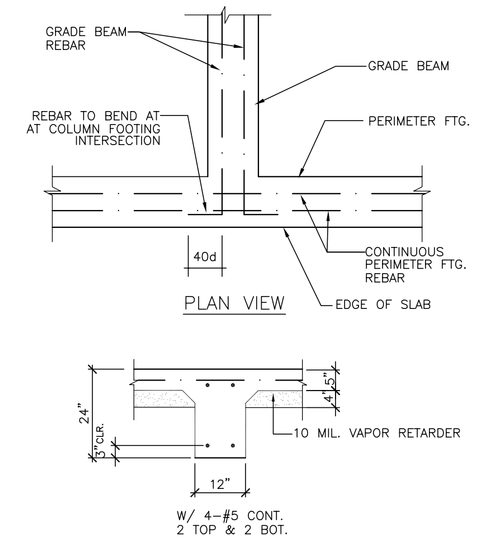

4 GRADE BEAM FTG.
SCALE: 1/2"=1'-0"

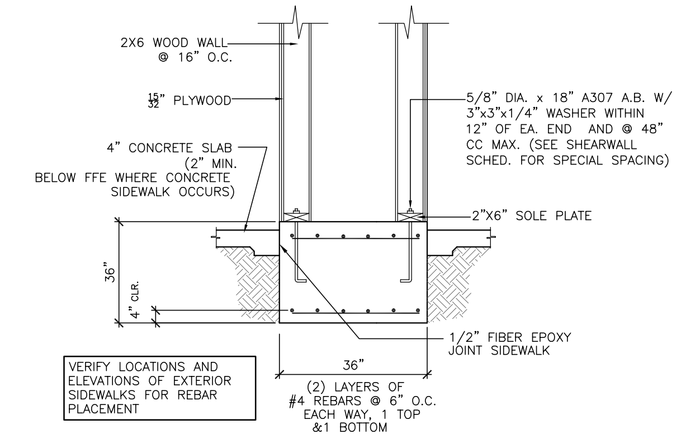

5 PERIM. FTG.
SCALE: 1/2"=1'-0"

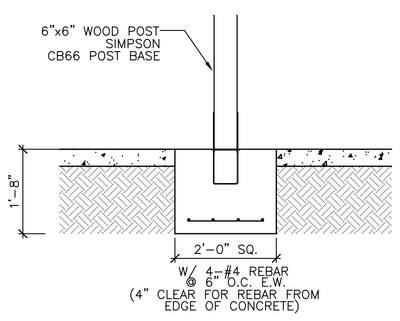

6 COL. FTG.
SCALE: 3/4"=1'-0"

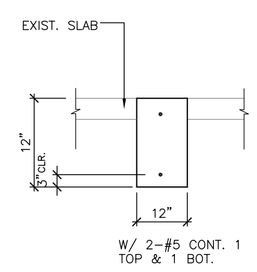

7 GRADE BEAM FTG.
SCALE: 1/2"=1'-0"

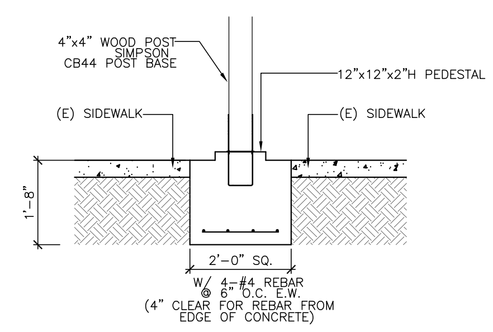

8 PORCH FTG.
SCALE: 3/4"=1'-0"

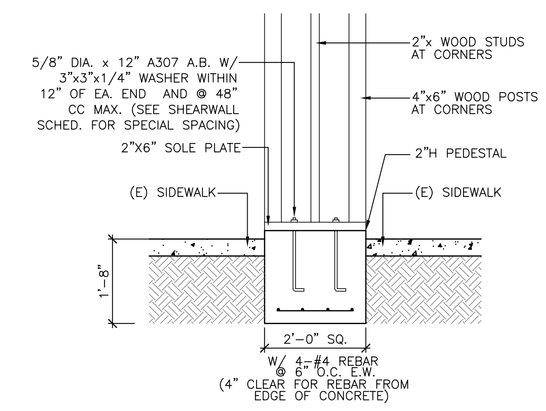

9 PORCH FTG.
SCALE: 3/4"=1'-0"

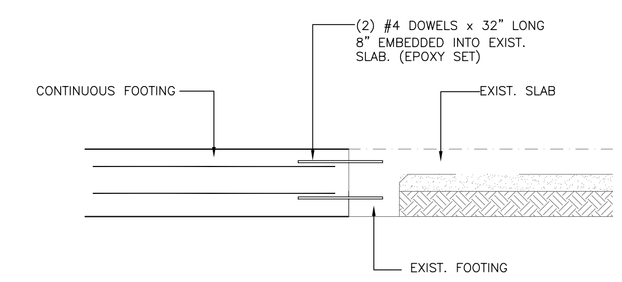

10 NEW FOOTING/EXIST. FOOTING
NOT TO SCALE

EPOXY NOTES:
THE SPECIAL INSPECTOR WILL VERIFY THE DRILLING OF ANY HOLES, THE CLEANLINESS OF THE HOLE , THE MOISTURE IN THE HOLE, MIXING THE EPOXY, THE BRAND OF THE EPOXY AND THE PROPER MATERIAL FOR THE ASSEMBLY. SET THREADED ROD, BOLTS AND/OR DOWELS EMBEDDED 8" INTO CONCRETE USING ONE OF THE EPOXY PRODUCTS LISTED BELOW. SET IN CLEAN, PREDRILLED HOLE. HOLE MUST BE THE THEREADED ROD, BOLT, AND OR DOWEL SIZE DIAMETER + 1/4" DIAMETER.

HILTI HIT RE 500 SD EPOXY (ICC ES ESR-2322)
SIMPSON SET (ICC ES ESR-1772)
INSTALLATION TO INSURE THAT THE REBARS ARE INSTALLED PER ICBO APPROVAL FOR THE PRODUCT USED.

* SPECIAL INSPECTION WILL BE REQUIRED FOR THIS EPOXY INSTALLATION TO INSURE THAT THE BOLTS ARE INSTALLED PER ICBO APPROVAL FOR THE PRODUCT USED.

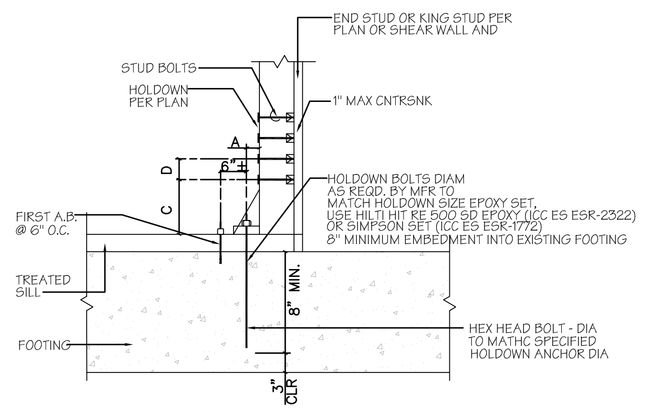

HOLDOWN ON EXISTING FOOTING
NOT TO SCALE

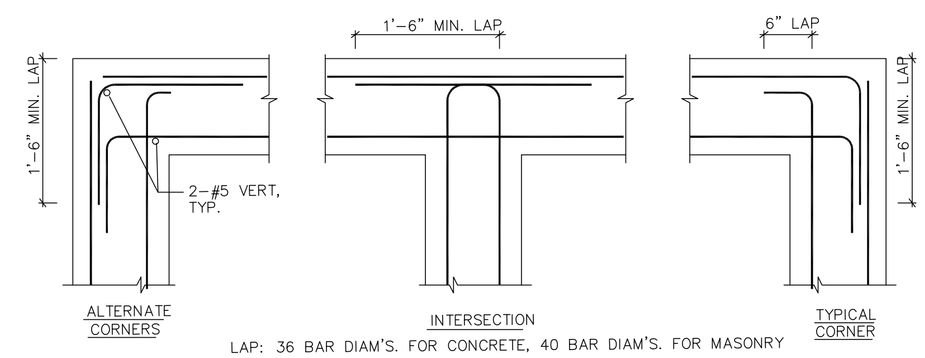

LAP: 36 BAR DIAM'S. FOR CONCRETE, 40 BAR DIAM'S. FOR MASONRY

NOTE:
WHERE SINGLE LAYER OF REINFORCING OCCURS, BEND STEEL AS SHOWN FOR OUTSIDE BARS.

REINF. AT INTERSECTION OF CONC. & MASONRY WALLS, FTG., & BMS.
NOT TO SCALE

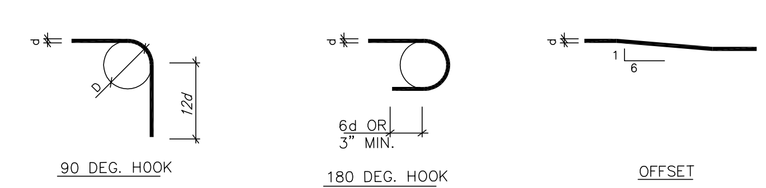

D - 6d FOR #3 THRU #8 NOTE:
D - 8d FOR #9 THRU #11 ALL BENDS SHALL BE MADE COLD
D - 10d FOR #14 THRU #18

REBAR BENDS & END HOOKS
NOT TO SCALE

SHEET: 3 OF: 9
DWN. BY: J.F.
REV. BY: R.M.
APP. BY: O.M.

LIBRARY EXPANSION PROJECT
FOOTINGS DETAILS
IN THE CITY OF IMPERIAL, CALIFORNIA
DATE: 04/24/15

S3

SEAL:

BY: ROBERTO C. MARTINEZ
653 W. MAIN ST. SUITE 103
EL CENTRO, CA 92243
DATE: 4/24/2015
R.C.E. NO. C-74475

REVISIONS

NO.	DESCRIPTION:	DATE:	BY:
△			
△			
△			

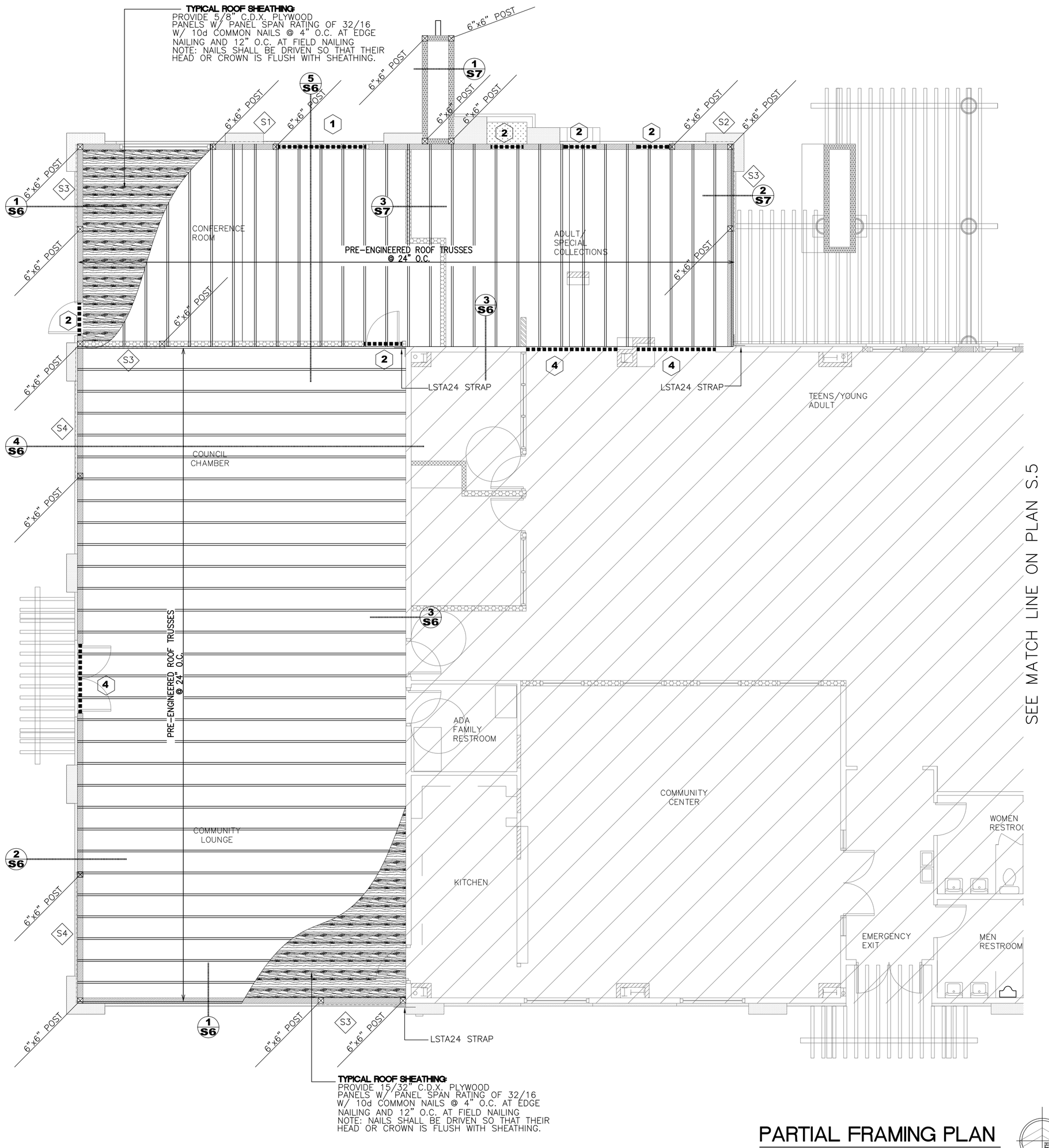

PARTIAL FRAMING PLAN

SCALE 3/16" = 1'-0"

BEAM SCHEDULE	
SYMBOL	BEAM SIZE
1	6"x8"
2	6"x6"
3	6"x8"
4	6"x10"
5	6"x6"
6	6"x14"

SHEATHING NOTES:

1.– PLACE ROOF SHEATHING WITH END JOINTS STAGGERED, SECURE SHEETS OVER FIRM BEARING WITH 8d COMMON NAILS AT 6" O.C. AT PANEL EDGES, AT 12" O.C. AT INTERMEDIATE SUPPORTS.

2.– ALL SHEATHING TO BE PLACED PERPENDICULAR TO FRAMING MEMBERS.

3.– SHEATHING WHICH RECEIVES LIGHTWEIGHT INSULATING CONCRETE TO BE COVERED WITH 4 MIL. POLYETHYLENE FILM.

4.– LEAVE 1/8" SPACE AT ALL PANEL EDGE JOINTS AND END JOINTS UNLESS OTHERWISE RECOMMENDED BY MANUFACTURER.

5.– THE SPACING IN INCHES OF ROOF SUPPORTS OVER WHICH PANELS ARE APPLIED SHALL NOT EXCEED THE SPAN RATING OF THE PANELS.

TIMBER NOTES:

1.– SAWN LUMBER SHALL BE DOUGLAS FIR–LARCH CONFORMING TO THE 2013 CBC SECTION 2303 AND ANSI/AWC NDS–2012 NATIONAL DESIGN SPECIFICATION FOR WOOD CONSTRUCTION (AND SUPPLEMENT) REVISED 2012, AND SHALL BE GRADE MARKED BY EITHER WCIB OR WWPA.

2.– SAWN STRUCTURAL FRAMING MEMBERS SHALL BE AS FOLLOWS (U.N.O)

MEMBERS	GRADE
2x WALL STUDS	DOUGLAS FIRCH #1
2x FLOOR JOIST AND ROOF RAFTERS	DOUGLAS FIRCH #1
BEAMS, HEADERS AND POSTS	DOUGLAS FIRCH #1

SHEAR WALL SCHEDULE

SYMBOL	SHEAR WALL THICKNESS/ PANEL GRADE	SHEAR WALL LENGTH (FT)	SHEAR WALL EDGE NAILING (E.N)	END STUDS (PANEL JTS.) MIN., U.N.O.	5/8" DIA. (U.N.O.) ANCHOR BOLTS (3) (5)	SILL PLATE
S1	15/32" STRUC–1	6'–0"	8d AT 6" O.C.	2x DFL	32" O.C.	2x PTDF
S2	15/32" STRUC–1	6'–0"	8d AT 4" O.C.	3x DFL	24" O.C.	3x PTDF
S3	15/32" STRUC–1	8'–0"	8d AT 3" O.C. STAGGERED	3x DFL	24" O.C.	3x PTDF
S4	15/32" STRUC–1	12'–0"	10d AT 2" O.C. STAGGERED	4x DFL	16" O.C.	3x PTDF

NOTE:

1.– SHEAR WALL NAILING APPLIES TO STUDS TOP & BOTTOM PLATES & BLOCKING, U.N.O., FIELD NAILING FOR SHEATHING TO BE 10" O.C.

2.– USE COMMON WIRE NAILS, U.N.O.

3.– PROVIDE 8" MINIMUM EMBEDMENT FOR ANCHOR BOLTS

4.– ALL PANEL EDGES SHALL BE BLOCKED

5.– PROVIDE SQUARE STEEL PLATE WASHERS OF MINIMUM 3"x3" EACH WOOD PLATE OR SILL PLATE BOLT.

NAILING SCHEDULE — TABLE 2304.9.1

CONNECTION	FASTENING	LOCATION
JOIST TO SILL OR GIRDER	3–8d COMMON, 3–3"x0.131" NAILS OR 3–3" 14 GAGE STAPLES	TOENAIL
BRIDGING TO JOIST	2–8d COMMON, 2–3"x0.131" NAILS OR 2–3" 14 GAGE STAPLES	TOENAIL EA. END
1"x6" SUBFLOOR OR LESS TO EACH JOIST	2–3d COMMON	FACENAIL
WIDER THAN 1"x6" SUBFLOOR TO EA. JOIST	3–8d COMMON	FACENAIL
2" SUBFLOOR TO JOIST OR GIRDER	2–16d COMMON	BLIND AND FACENAIL
SOLE PLATE TO JOIST OR BLOCKING	16d @ 16" O.C., 3"x0.131" NAILS @ 8" O.C. OR 3" 14 GAGE STAPLES	TYP. FACENAIL
SOLE PLATE TO JOIST OR BLOCKING AT BRACED WALL PANEL	3–16d @ 16", 4"x0.131" NAILS @ 8" O.C. OR 4–3" 14 GAGE STAPLES PER 16"	BRACED WALL PANELS
TOP PLATE TO STUD	2–16d COMMON, 3–3"x0.131" NAILS OR 3–3" 14 GAGE STAPLES	END NAIL
STUD TO SOLE PLATE	4–8d COMMON, 4–3"x0.131" NAILS OR 3–3" 14 GAGE STAPLES	TOENAIL
	2–16d COMMON, 3–3"x0.131" NAILS OR 3–3" 14 GAGE STAPLES	ENDNAIL
DOUBLE STUDS	16d @ 24" O.C., 3–3"x0.131" NAILS @ 12" O.C. OR 3" 14 GAGE STAPLE @ 8" O.C.	FACENAIL
DOUBLE TOP PLATES	16d @ 16" O.C., 3"x0.131" NAIL @ 12" O.C., OR 3" 14 GAGE STAPLE @ 12" O.C.	TYP. FACENAIL
	8–16d COMMON, 12–3"x0.131" NAILS OR 12–3" 14 GAGE STAPLES	LAP SPLICE
BLOCKING BETWEEN JOISTS OR RAFTERS TO TOP PLATE	3–8d COMMON, 3–3"x0.131" NAILS OR 3–3" 14 GAGE STAPLES	TOENAIL
RIM JOIST TO TOP PLATE	8d @ 6" O.C., 3"x0131" NAIL @ 6" O.C. OR 3" 14 GAGE STAPLE @ 6" O.C.	TOENAIL
TOP PLATES, LAPS, INTERSECTIONS	2–16d COMMON, 3–3"x0.131" NAILS OR 3–3" 14 GAGE STAPLES	FACENAIL
CONTINUOUS HEADER, TWO PIECES	16d COMMON @ 16" O.C. ALONG EDGE	
CEILING JOIST TO PLATE	3–8d COMMON, 5–3"x0131" NAILS OR 5–3" 14 GAGE STAPLES	TOENAIL
CONTINUOUS HEADER TO STUD	4–8d COMMON	TOENAIL
CEILING JOIST, LAPS OVER PARTITIONS (SEE SECTION AND TABLE 2308.10.4.1)	3–16d COMMON MIN., 4–3"x 0.131" NAILS OR 4–3" 14 GAGE STAPLES	FACENAIL
CEILING JOISTS TO PARALLEL RAFTERS (SEE SECTION AND TABLE 2308.10.4.1)	3–16d COMMON MIN., 4–3"x 0.131" NAILS OR 4–3" 14 GAGE STAPLES	FACENAIL
RAFTER TO PLATE (SEE SECTION AND TABLE 2308.10.1)	3–8d COMMON, 3–3"x0.131" NAILS OR 3–3" 14 GAGE STAPLES	TOENAIL
1" DIAGONAL BRACE TO EACH STUD & PLATE	2–8D COMMON, 2–3"x.0131" NAILS OR 3–3" 14 GAGE STAPLES	FACENAIL
1"x8" SHEATHING TO EACH BEARING	3–8d COMMON	FACENAIL
WIDER THAN 1"x8" SHEATHING TO EA. BEARING	3–8d COMMON	FACENAIL
BUILT–UP CORNER STUDS	16d COMMON @ 24" O.C., 3"x0.131" NAILS @ 16" O.C. OR 3–3" 14 GAGE STAPLES @ 16" O.C.	
BUILT–UP GIRDER AND BEAM	20d @ 32" O.C., 3–3"x0.131" NAIL @ 24" O.C. OR 3" 14 GAGE STAPLE @ 24" O.C.	FN @ T&B STAGGERED ON OPP. SIDES
	2–20d COMMON, 3–3"x0.131" NAILS OR 3–3" 14 GAGE STAPLES	FN @ ENDS & EA. SPLICE
2" PLANKS	16D COMMON @ EA. BEARING	
COLLAR TIE TO RAFTER	3–10D COMMON, 4–3"x0.131" NAILS OR 4–3" 14 GAGE STAPLES	FACENAIL
JACK RAFTER TO HIP	3–10d COMMON, 4–3"x0.131" NAILS OR 4–3" 14 GAGE STAPLES	TOENAIL
	2–10d COMMON, 3–3"x0.131" NAILS OR 3–3" 14 GAGE STAPLES	FACENAIL
ROOF RAFTER TO 2x RIDGE BEAM	2–16d COMMON, 3–3"x0.131" NAILS OR 3–3" 14 GAGE STAPLES	TOENAIL
	2–16d COMMON, 3–3"x0.131" NAILS OR 3–3" 14 GAGE STAPLES	FACENAIL
JOIST TO BAND JOIST	3–16d COMMON, 4–3"x0.131" NAILS OR 4–3" 14 GAGE STAPLES	FACENAIL
LEDGER STRIP	3–16d COMMON, 4–3"x0.131" NAILS OR 4–3" 14 GAGE STAPLES	FACENAIL
WOOD STRUCTURAL PANELS & PARTICLEBOARD SUBFLOOR, ROOF & WALL SHEATHING (TO FRAMING) 1/2" OR LESS = 6d, 2–3/8"x0.113" NAIL OR 1–3/4" 16 GAGE STAPLE @ 6" EDGE & 12" FIELD 19/32" TO 3/4" = 8d OR 6d, 2–3/8"x0.113" NAIL OR 2" 16 GAGE STAPLE @ 6" EDGE & 12" FIELD 7/8" TO 1" = 8d @ 6" EDGE & 12" FIELD 1–1/8" TO 1–1/4" = 10d OR 8d @ 6" EDGE & 12" FIELD SINGLE FLOOR (COMBINATION SUBFLOOR–UNDERLAYMENT TO FRAMING) 3/4" OR LESS = 6d @ 6" EDGE & 12" FIELD 7/8" TO 1" = 8d @ 6" EDGE & 12" FIELD 1–1/8" TO 1–1/4" = 10d OR 8d @ 6" EDGE & 12" FIELD		
PANEL SIDING (TO FRAMING)	1/2" OR LESS = 6d COMMON 5/8" = 8d COMMON	
FIBERBOARD SHEATHING 1/2" = NO. 11 GAGE ROOFING NAIL, 6d OR NO. 16 GAGE STAPLE 25/32" = NO. 11 GAGE ROOFING NAIL, 8d OR NO. 16 GAGE STAPLE (FASTENERS SPACED 3" O.C. EDGE, 6" O.C. FIELD WHEN USED AS STRUCT. SHEATHING. SPACING SHALL 6" O.C. EDGE AND 12" O.C. FIELD FOR NON–STRUCTURAL APPLICATIONS)		
INTERIOR PANELING	1/4" = 4d @ 6" O.C. EDGE, 12" O.C. FIELD 3/8" = 6d @ 6" O.C. EDGE, 12" O.C. FIELD	

SHEET: 4 OF: 9
DWN. BY: J.F.
REV. BY: R.M.
APP. BY: O.M.

LIBRARY EXPANSION PROJECT
FRAMING PLAN
IN THE CITY OF IMPERIAL, CALIFORNIA
DATE: 04/24/15

S4

SEAL: REGISTERED PROFESSIONAL ENGINEER ROBERTO C. MARTINEZ No. C-74475 STATE OF CALIFORNIA

BY: ROBERTO C. MARTINEZ
653 W. MAIN ST. SUITE 103
EL CENTRO, CA 92243
DATE: 4/24/2015
R.C.E. NO. C-74475

REVISIONS

NO.	DESCRIPTION:	DATE:	BY:
△			
△			
△			

City of Imperial California

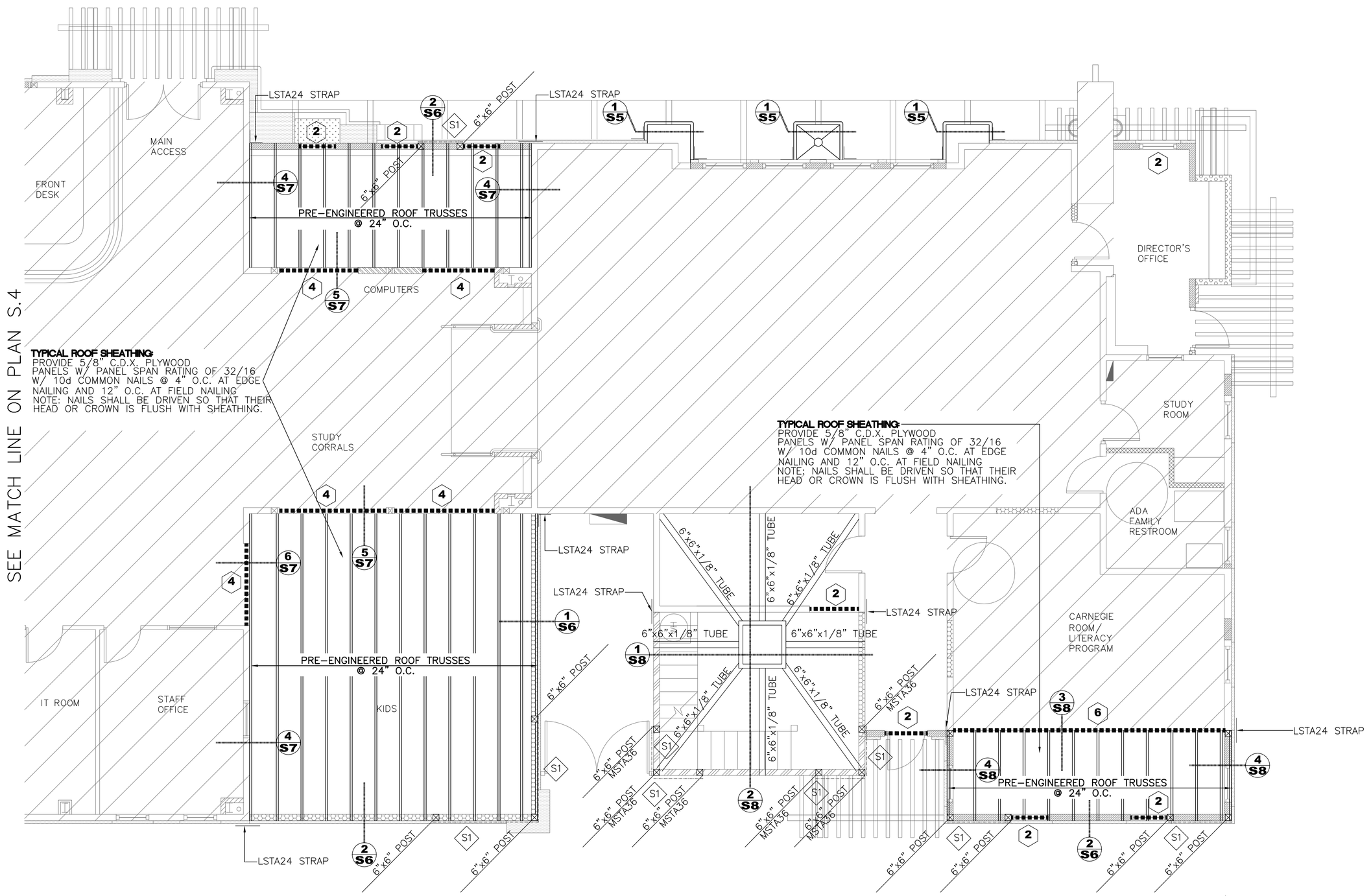

PARTIAL ROOF FRAMING PLAN

SCALE 3/16" = 1'-0"

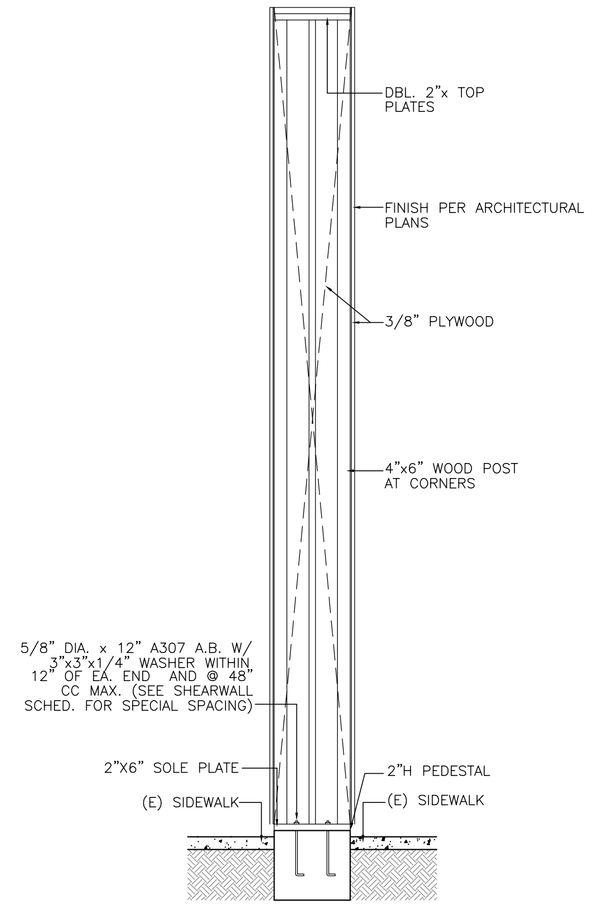

1 COL. ELEVATION

SCALE: 3/8"=1'-0"

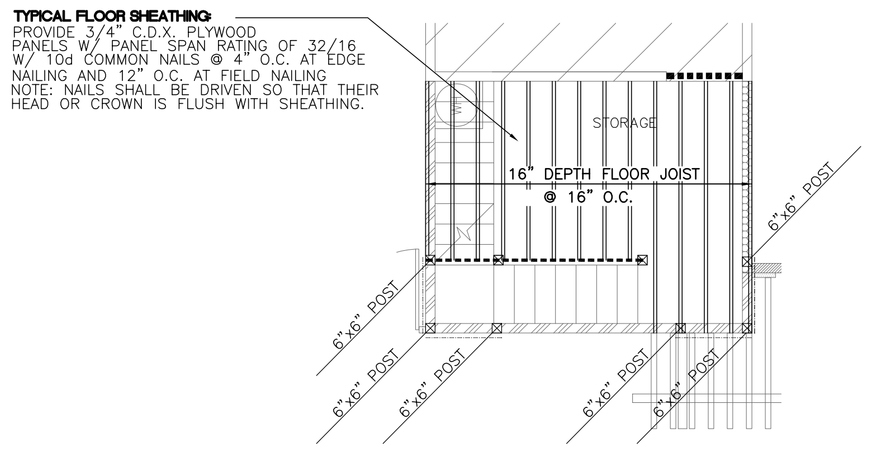

FLOOR FRAMING PLAN @ STORAGE

SCALE 3/16" = 1'-0"

SHEAR WALL SCHEDULE

SYMBOL	SHEAR WALL THICKNESS/ PANEL GRADE	SHEAR WALL LENGTH (FT)	SHEAR WALL EDGE NAILING (E.N)	END STUDS (PANEL JTS.) MIN., U.N.O.	5/8" DIA (U.N.O) ANCHOR BOLTS (3) (5)	SILL PLATE
S1	15/32" STRUC-1	6'-0"	8d AT 6" O.C.	2x DFL	32" O.C.	2x PTDF
S2	15/32" STRUC-1	6'-0"	8d AT 4" O.C.	3x DFL	24" O.C.	3x PTDF
S3	15/32" STRUC-1	8'-0"	8d AT 3" O.C. STAGGERED	3x DFL	24" O.C.	3x PTDF
S4	15/32" STRUC-1	12'-0"	10d AT 2" O.C. STAGGERED	4x DFL	16" O.C.	3x PTDF

NOTE:
1.- SHEAR WALL NAILING APPLIES TO STUDS TOP & BOTTOM PLATES & BLOCKING, U.N.O., FIELD NAILING FOR SHEATHING TO BE 10" O.C.
2.- USE COMMON WIRE NAILS, U.N.O.
3.- PROVIDE 8" MINIMUM EMBEDMENT FOR ANCHOR BOLTS
4.- ALL PANEL EDGES SHALL BE BLOCKED
5.- PROVIDE SQUARE STEEL PLATE WASHERS OF MINIMUM 3"x3" EACH WOOD PLATE OR SILL PLATE BOLT.

BEAM SCHEDULE

SYMBOL	BEAM SIZE
1	6"x8"
2	6"x6"
3	6"x8"
4	6"x10"
5	6"x6"
6	6"x14"

1.- SHEAR WALL NAILING APPLIES TO STUDS TOP & BOTTOM PLATES &

SHEET: 5 OF: 9
DWN. BY: J.F.
REV. BY: R.M.
APP. BY: O.M.

LIBRARY EXPANSION PROJECT
FRAMING PLAN
IN THE CITY OF IMPERIAL, CALIFORNIA
DATE: 02/05/15

S5

SEAL: REGISTERED PROFESSIONAL ENGINEER CIVIL No. C-74475 STATE OF CALIFORNIA

BY: ROBERTO C. MARTINEZ
653 W. MAIN ST. SUITE 103
EL CENTRO, CA 92243
DATE: 4/24/2015
R.C.E. NO. C-74475

REVISIONS

NO.	DESCRIPTION:	DATE:	BY:
△			
△			
△			

City of Imperial California

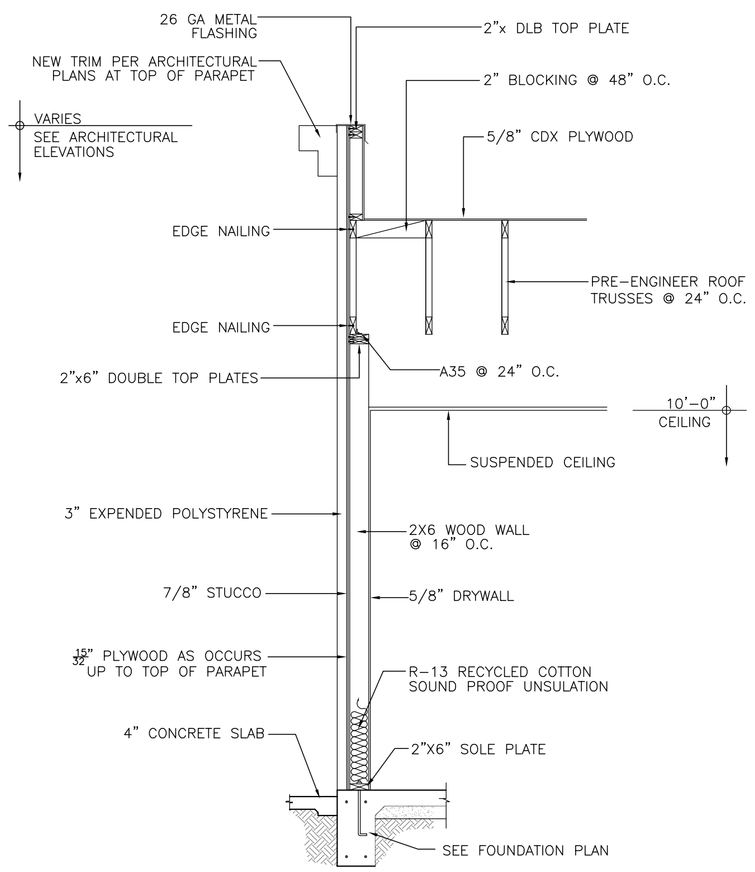

1 WALL SECTION
SCALE: 3/8"=1'-0"

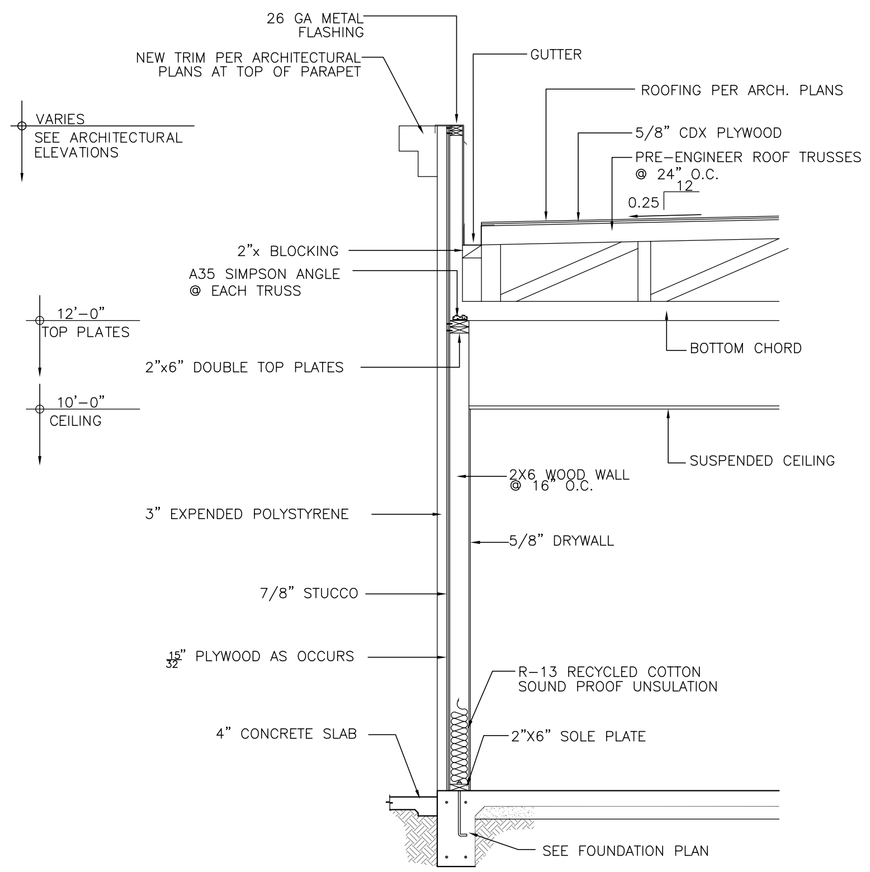

2 WALL SECTION
SCALE: 3/8"=1'-0"

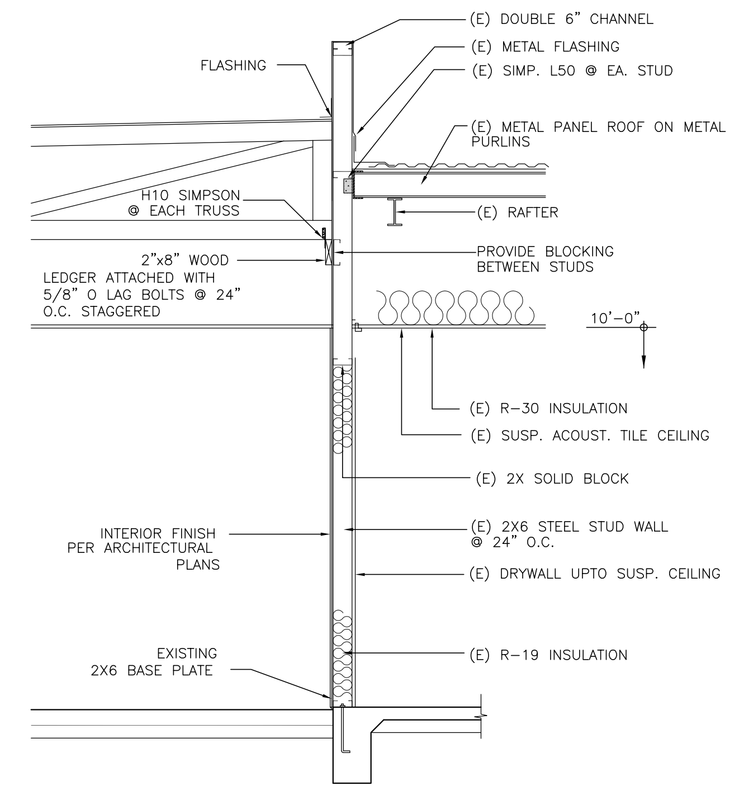

3 WALL SECTION
SCALE: 3/8"=1'-0"

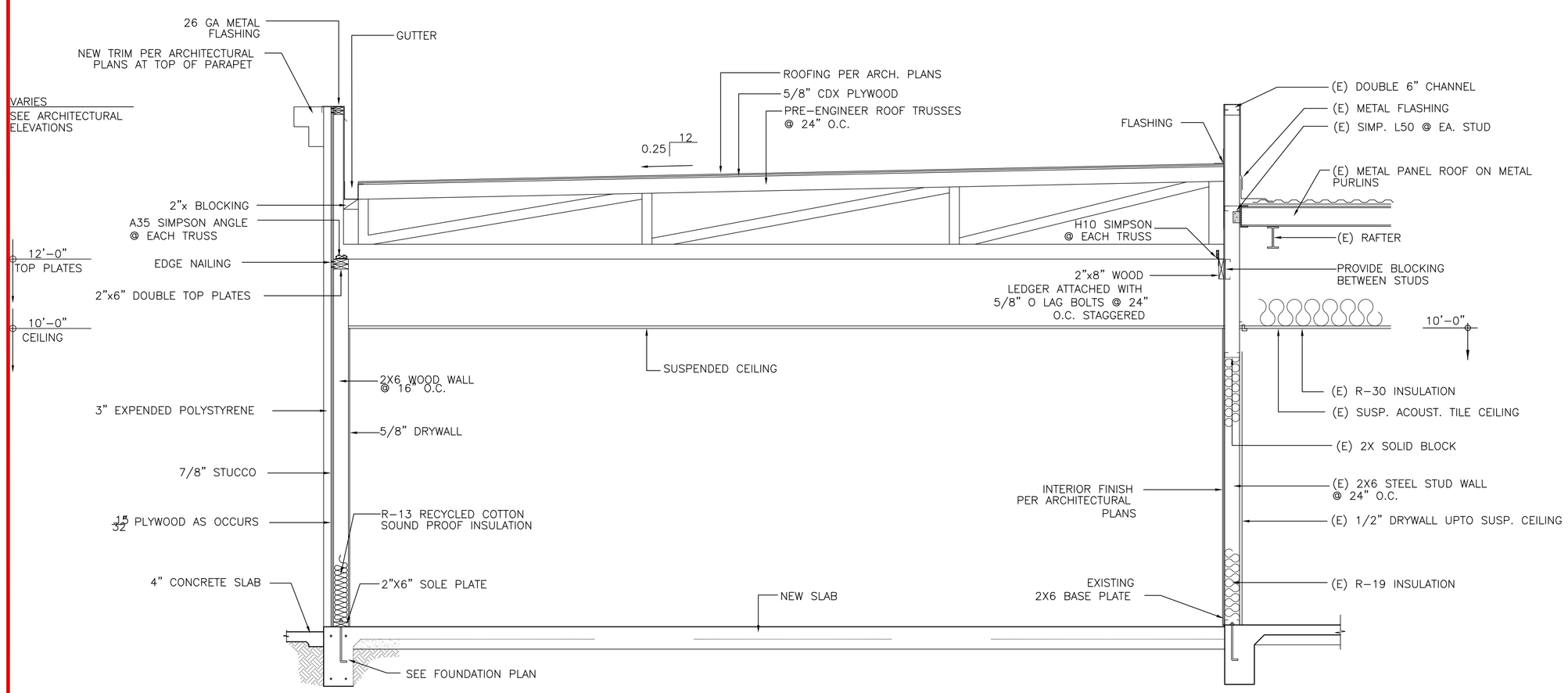

4 WALL SECTION
SCALE: 3/8"=1'-0"

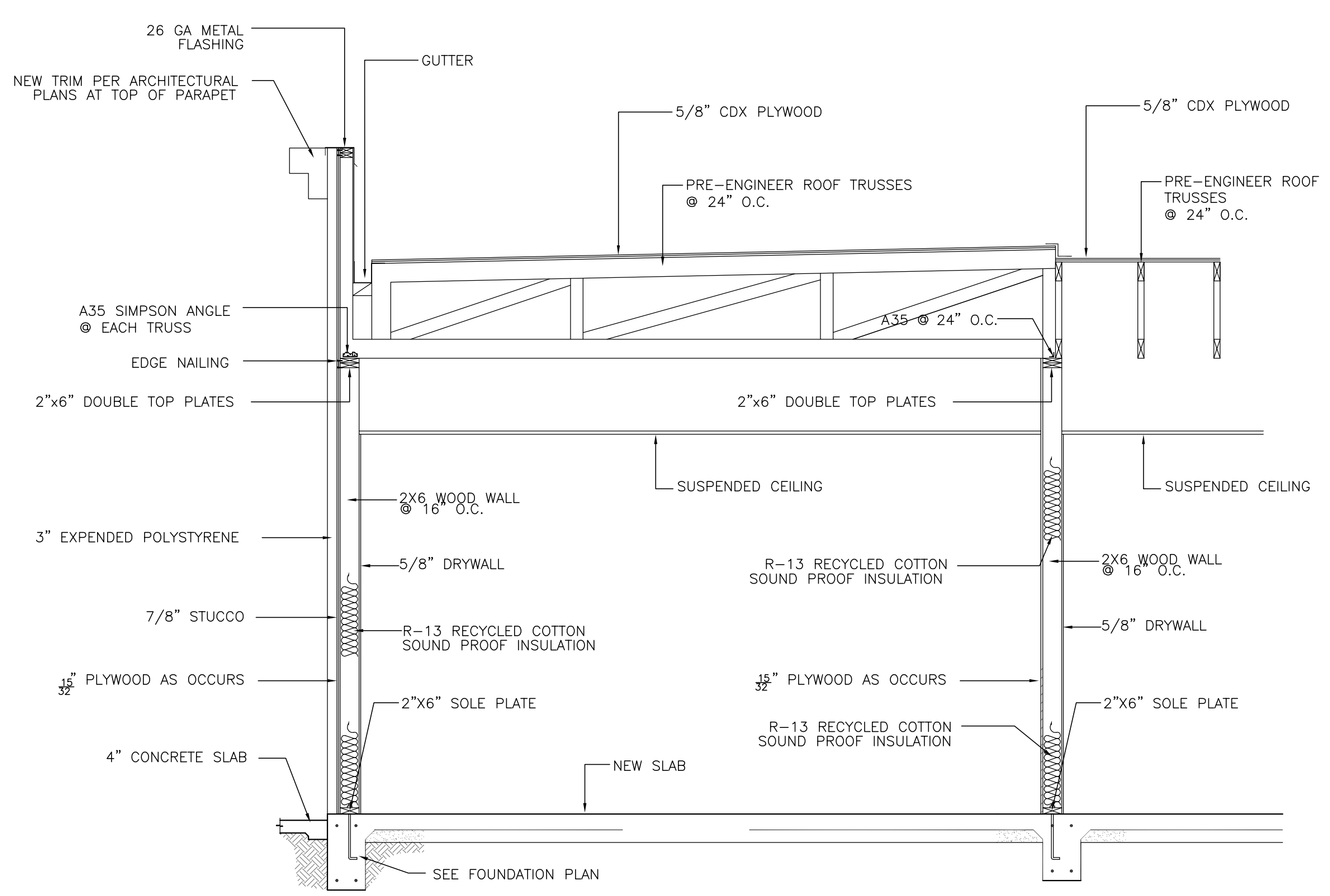

5 WALL SECTION
SCALE: 3/8"=1'-0"

NOTE:
SEE EXTERIOR AND INTERIOR FINISHES ON ARCHITECTURAL PLANS.

SHEET: 6 OF: 9
DWN. BY: J.F.
REV. BY: R.M.
APP. BY: O.M.

LIBRARY EXPANSION PROJECT
FRAMING PLAN
IN THE CITY OF IMPERIAL, CALIFORNIA
DATE: 02/05/15

S6

SEAL:
REGISTERED PROFESSIONAL ENGINEER
No. C-74475
CIVIL
STATE OF CALIFORNIA

BY: ROBERTO C. MARTINEZ
653 W. MAIN ST. SUITE 103
EL CENTRO, CA 92243
DATE: 4/24/2015
R.C.E. NO. C-74475

REVISIONS

NO.	DESCRIPTION:	DATE:	BY:
△			
△			
△			

City of Imperial California

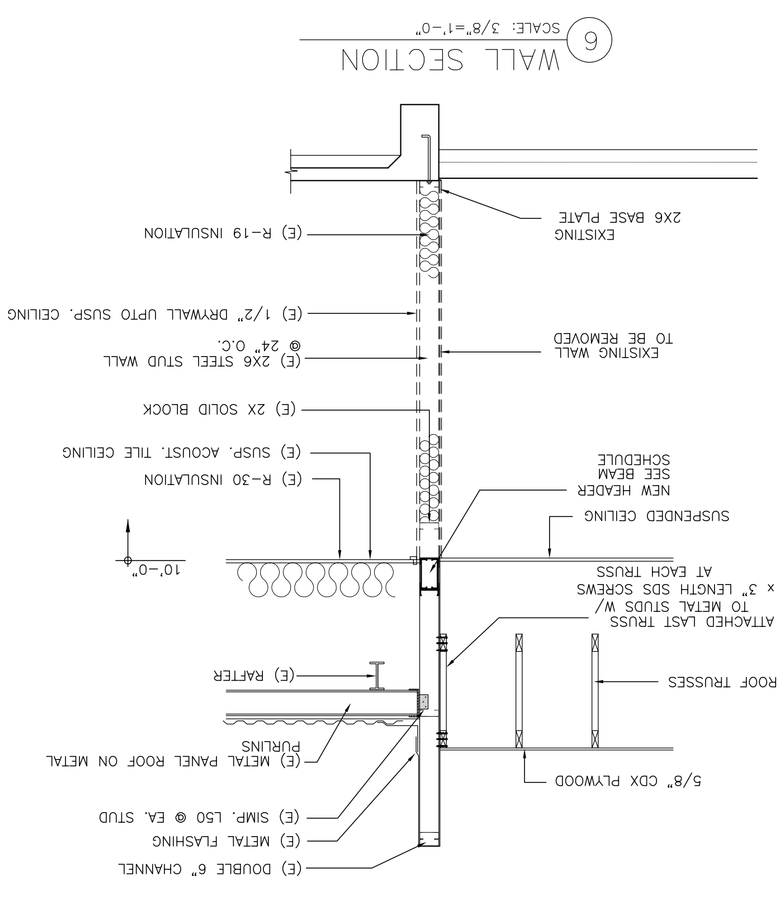

1 WALL SECTION
SCALE: 3/8"=1'-0"

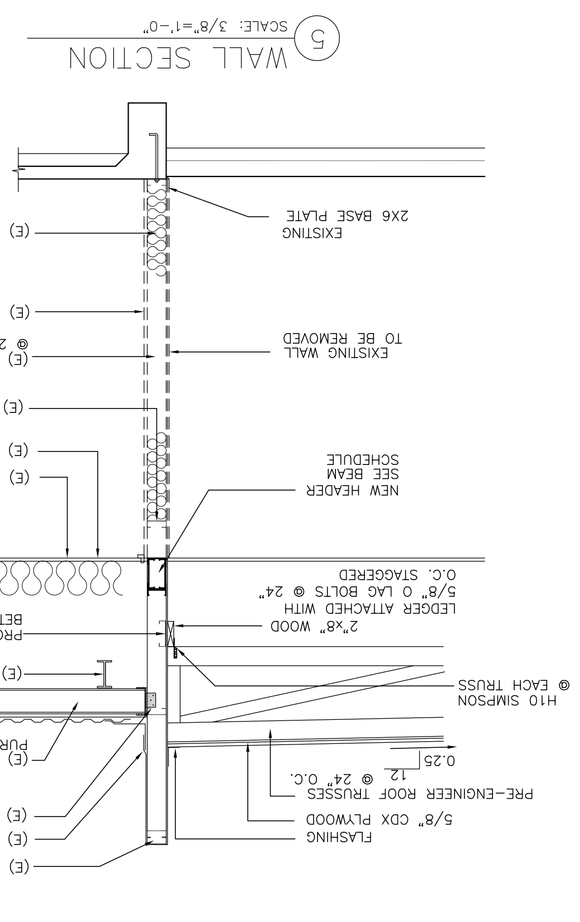

2 WALL SECTION
SCALE: 3/8"=1'-0"

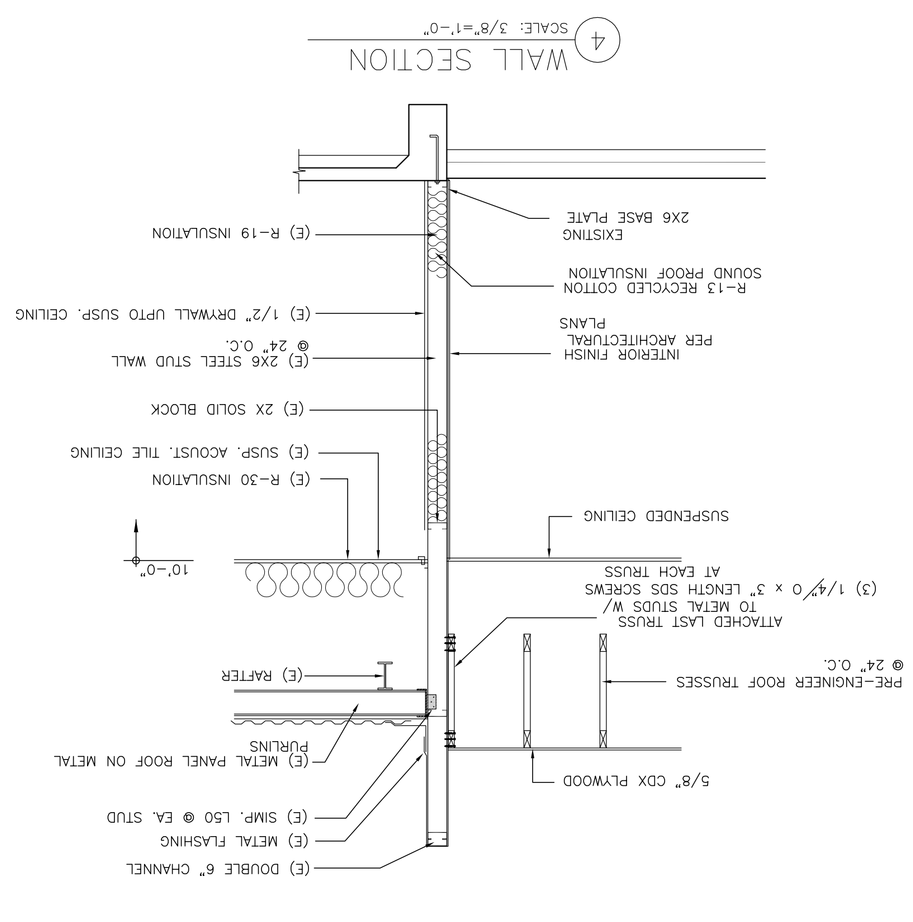

4 WALL SECTION
SCALE: 3/8"=1'-0"

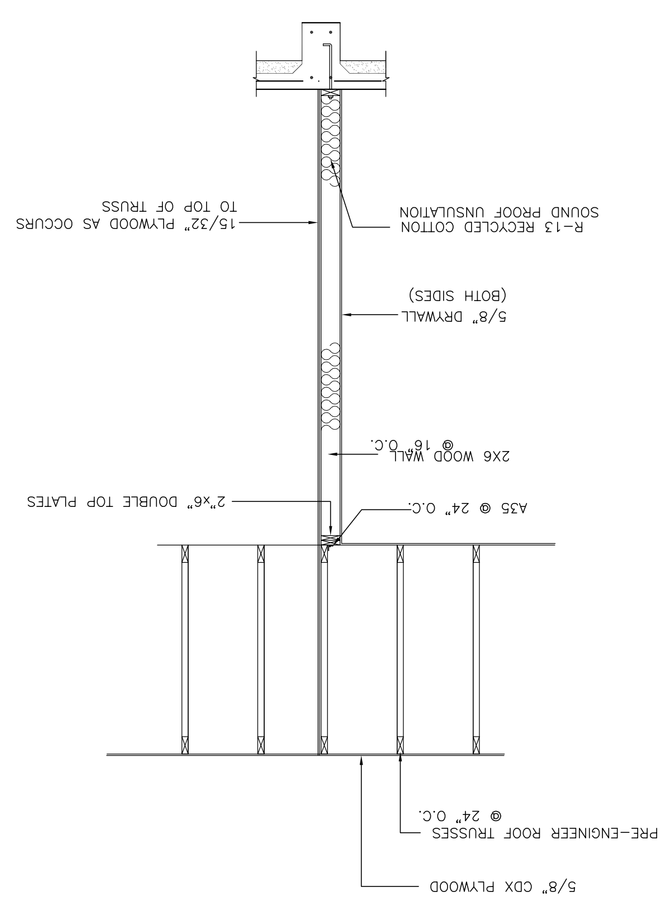

3 WALL SECTION
SCALE: 3/8"=1'-0"

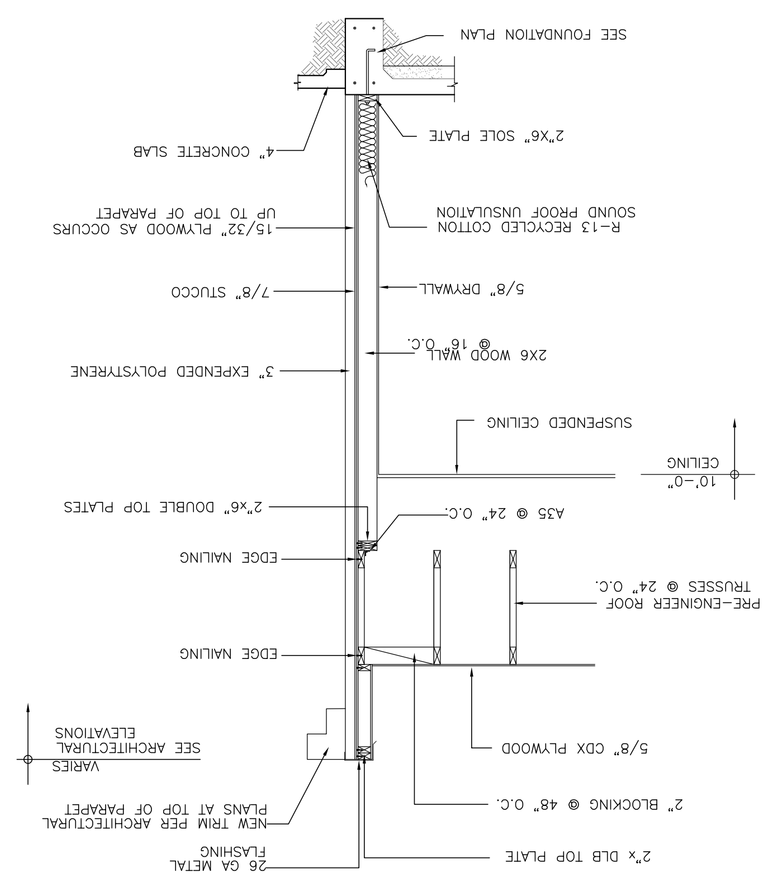

5 WALL SECTION
SCALE: 3/8"=1'-0"

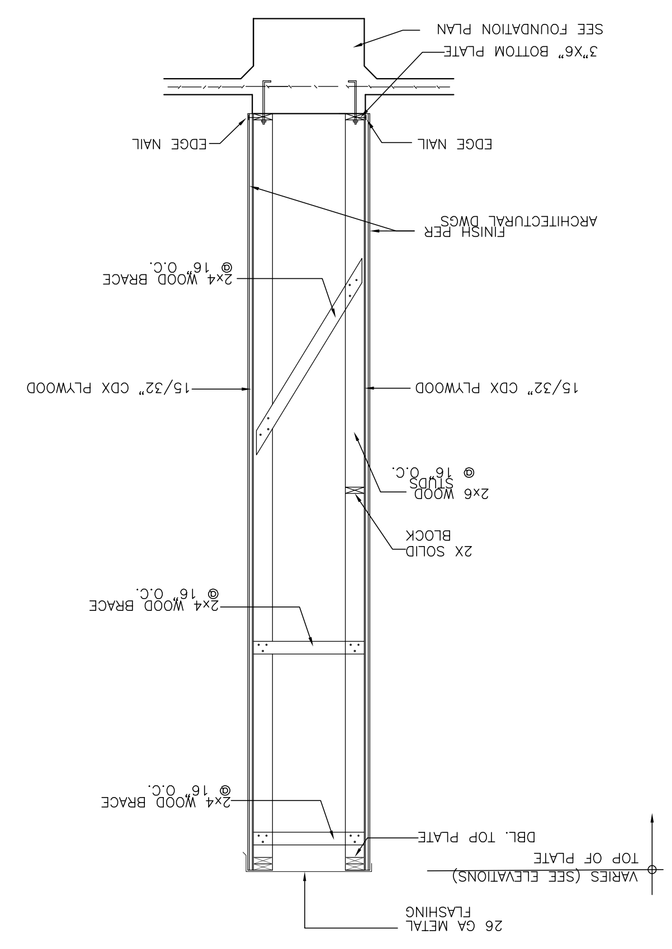

6 WALL SECTION
SCALE: 3/8"=1'-0"

NOTE

SEE EXTERIOR AND INTERIOR FINISHES ON ARCHITECTURAL PLANS.

City of Imperial California

REVISIONS			
NO.	DESCRIPTION:	DATE:	BY:
△			
△			
△			
△			

BY: ROBERTO C. MARTINEZ
653 W. MAIN ST. SUITE 103
EL CENTRO, CA 92243

DATE: 4/24/2015
R.C.E. NO. C-74475

SEAL: REGISTERED PROFESSIONAL ENGINEER No. C-74475 Civil STATE OF CALIFORNIA

S7

LIBRARY EXPANSION PROJECT

FRAMING PLAN

IN THE CITY OF IMPERIAL, CALIFORNIA

DATE: 02/05/15

SHEET: 7 OF: 9

DWN. BY: J.F.
REV. BY: R.M.
APP. BY: O.M.

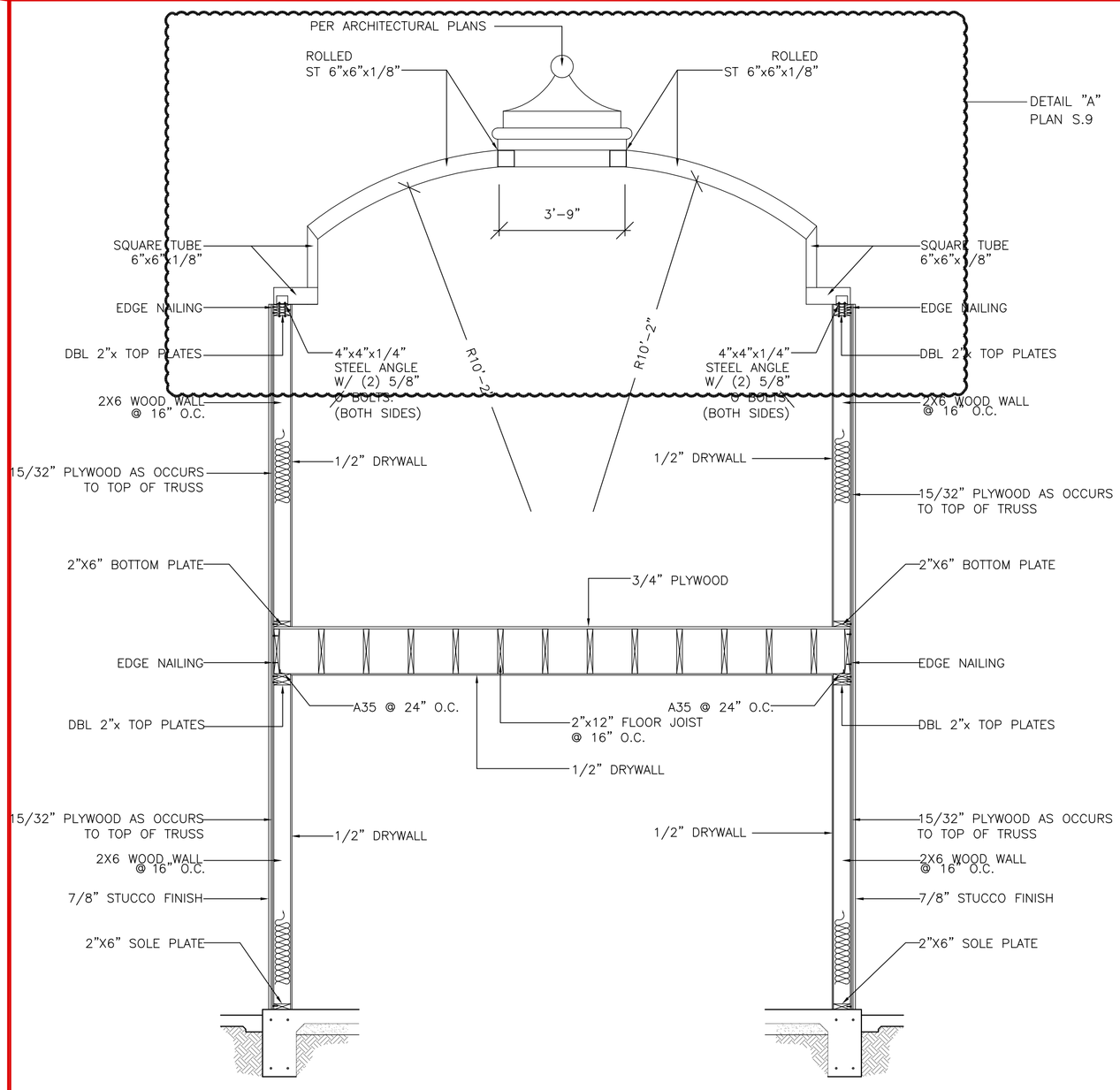

1 CROSS SECTION
SCALE: 3/8"=1'-0"

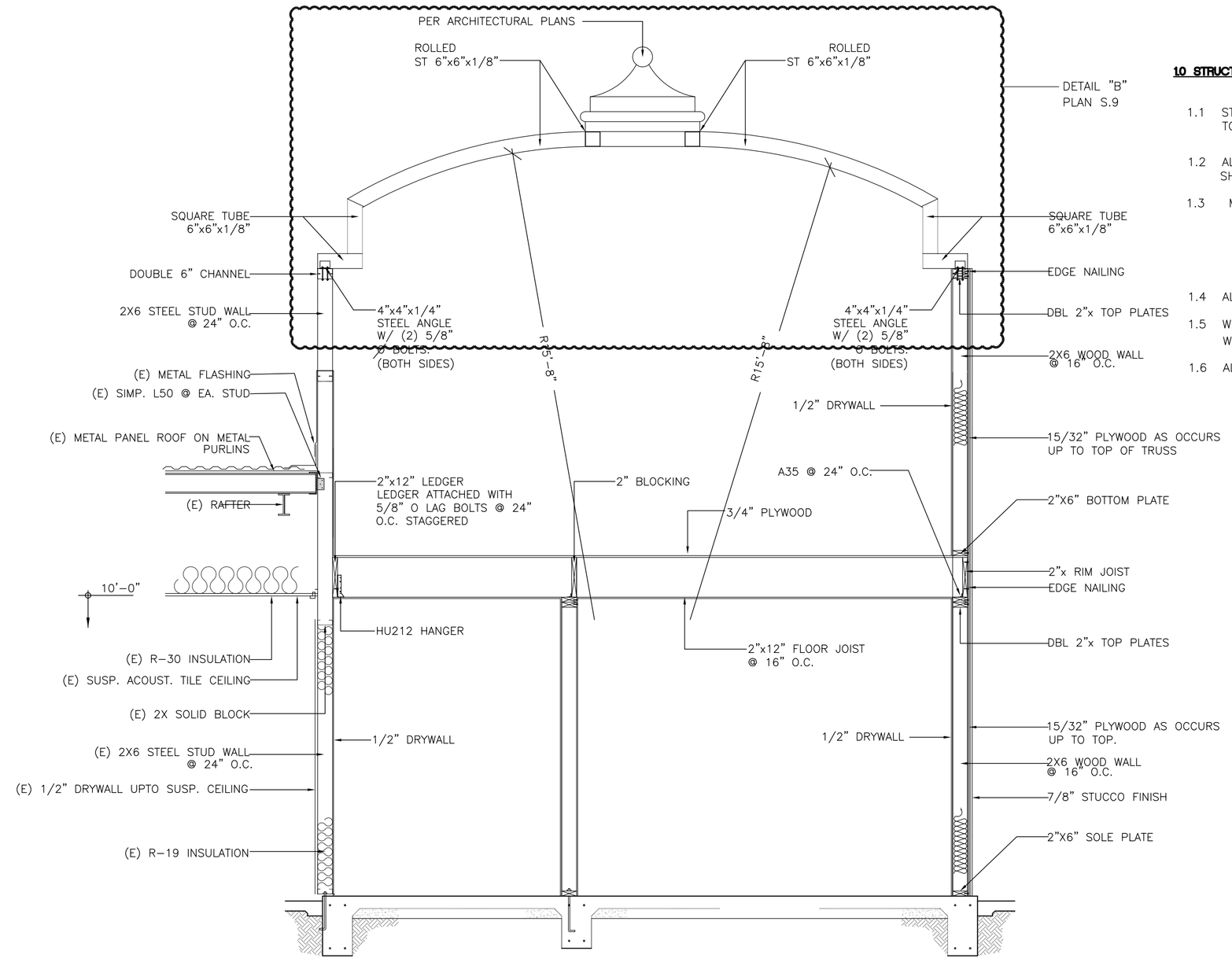

2 CROSS SECTION
SCALE: 3/8"=1'-0"

10 STRUCTURAL STEEL :

1.1 STRUCTURAL STEEL DESIGN, FABRICATION AND ERECTION SHALL CONFORM TO THE LATEST AISC SPECIFICATIONS.

1.2 ALL STRUCTURAL STEEL INCLUDING NUTS, BOLTS, FLOOR GRATING AND SHALL BE GALVANIZED COAT.

1.3 MATERIAL SPECIFICATIONS UNLESS NOTED OTHERWISE:
- A. STRUCTURAL SHAPES & PLATES– – – – –ASTM A36
- B. PIPE COLUMNS– – – – – – – – – – ASTM A53, GRADE B
- C. STEEL TUBES– – – – – – – – – – – ASTM A501
- D. HIGH STRENGTH BOLTS– – – – – – –ASTM A325

1.4 ALL BOLTS SHALL BE 3/4"ø A325–SC BOLTS, UNLESS NOTED OTHERWISE.

1.5 WELDING OF STRUCTURAL SHAPES AND PLATES SHALL BE IN CONFORMANCE WITH THE LATEST AMERICAN WELDING SOCIETY SPECIFICATION D1.1.

1.6 ALL WELDING SHALL BE PERFORMED BY LICENSED WELDERS.

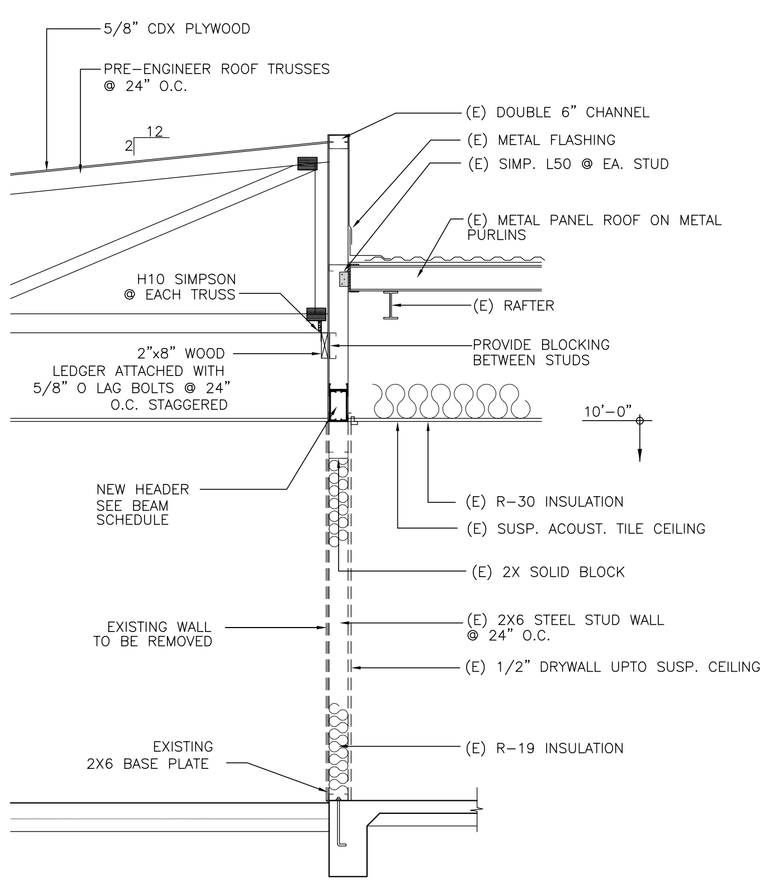

3 WALL SECTION
SCALE: 3/8"=1'-0"

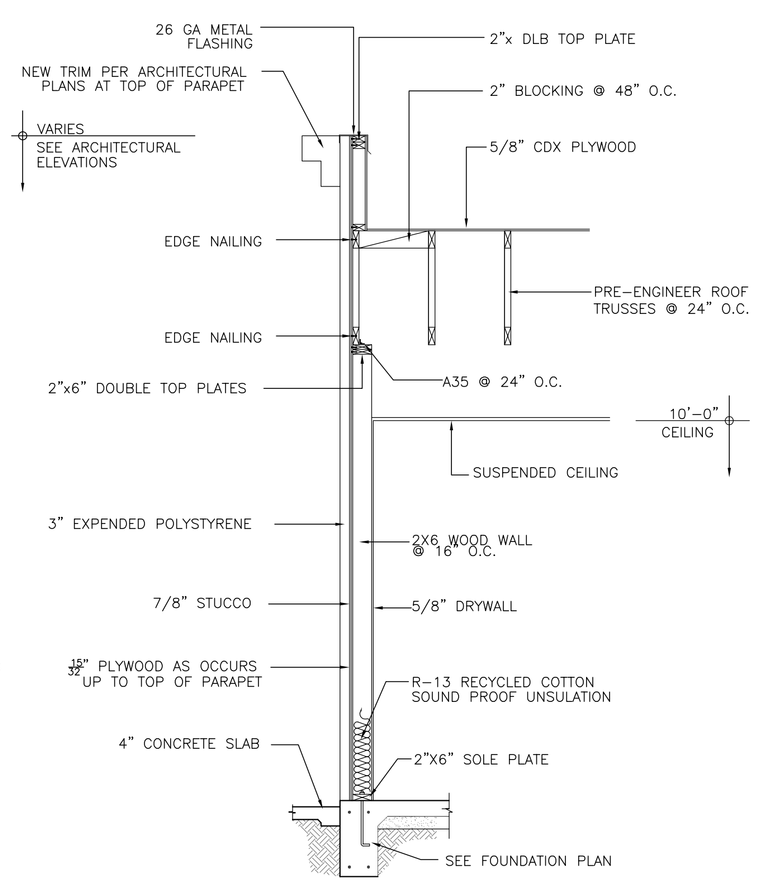

4 WALL SECTION
SCALE: 3/8"=1'-0"

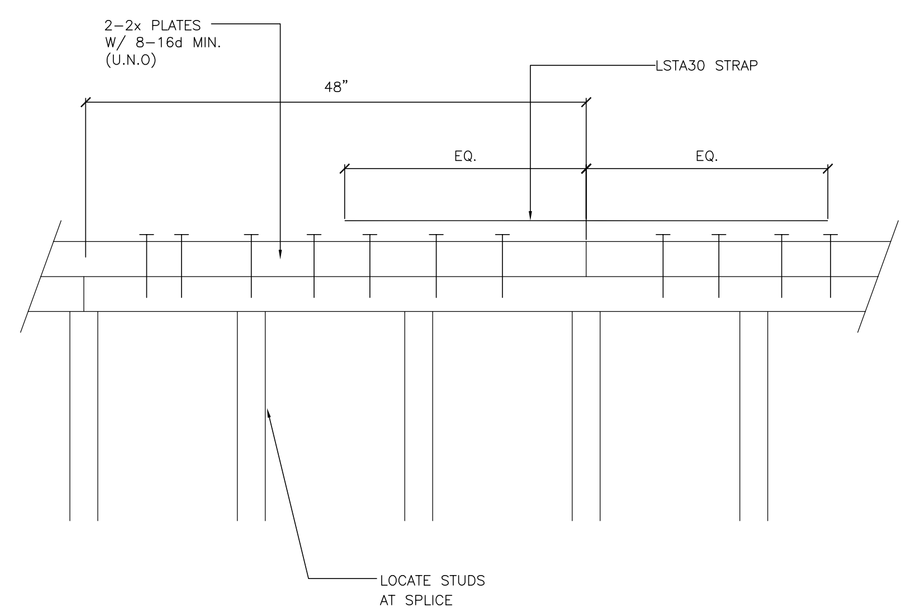

ELEVATION OF PLATE SPLICE (TYP)
NOT TO SCALE

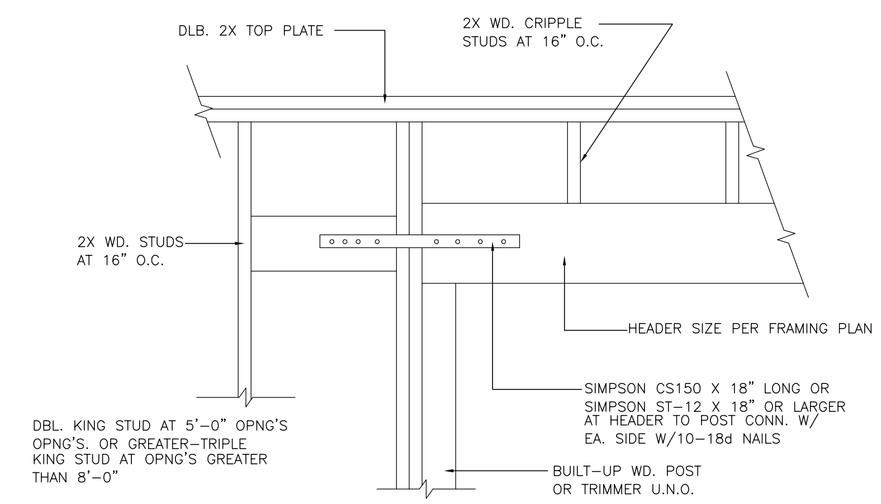

TYPICAL HEADER
NOT TO SCALE

NOTE:
SEE EXTERIOR AND INTERIOR FINISHES ON ARCHITECTURAL PLANS.

SHEET: 8 OF: 9
DWN. BY: J.F.
REV. BY: R.M.
APP. BY: O.M.

LIBRARY EXPANSION PROJECT
FRAMING PLAN
IN THE CITY OF IMPERIAL, CALIFORNIA
DATE: 02/05/15

S8

SEAL: REGISTERED PROFESSIONAL ENGINEER ROBERTO C. MARTINEZ No. C-74475 STATE OF CALIFORNIA

BY: ROBERTO C. MARTINEZ
653 W. MAIN ST. SUITE 103
EL CENTRO, CA 92243
DATE: 4/24/2015
R.C.E. NO. C-74475

REVISIONS

NO.	DESCRIPTION:	DATE:	BY:
△			
△			
△			

City of Imperial California

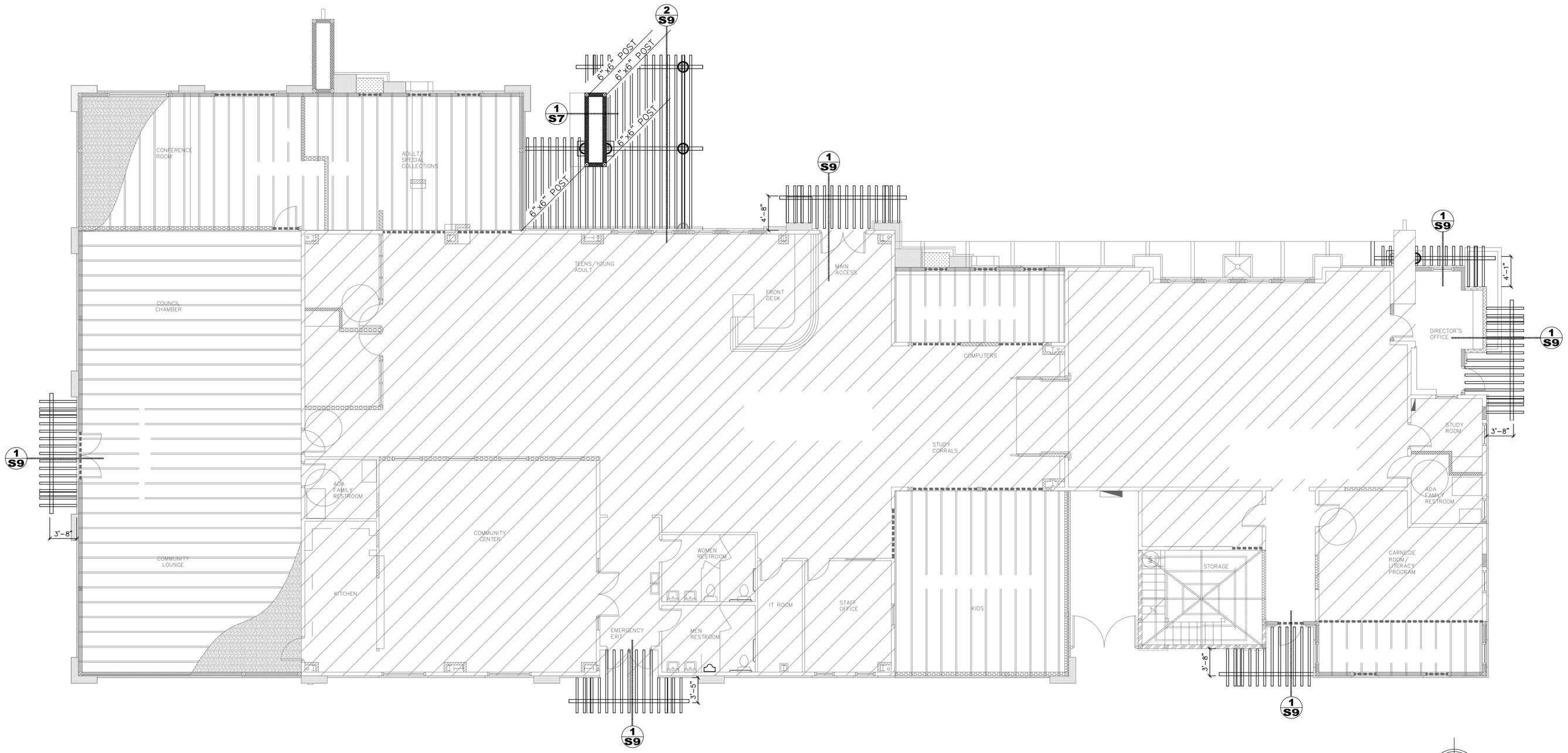

PERGOLAS FRAMING PLAN

SCALE 1/8" = 1'-0"

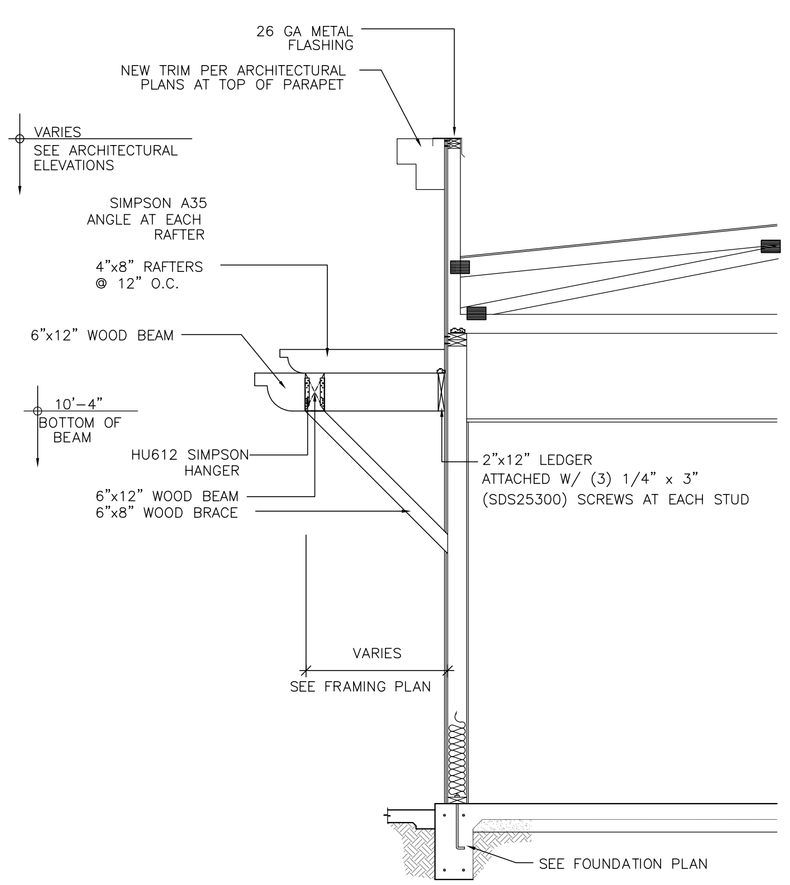

1 PERGOLA SECTION

SCALE: 3/8"=1'-0"

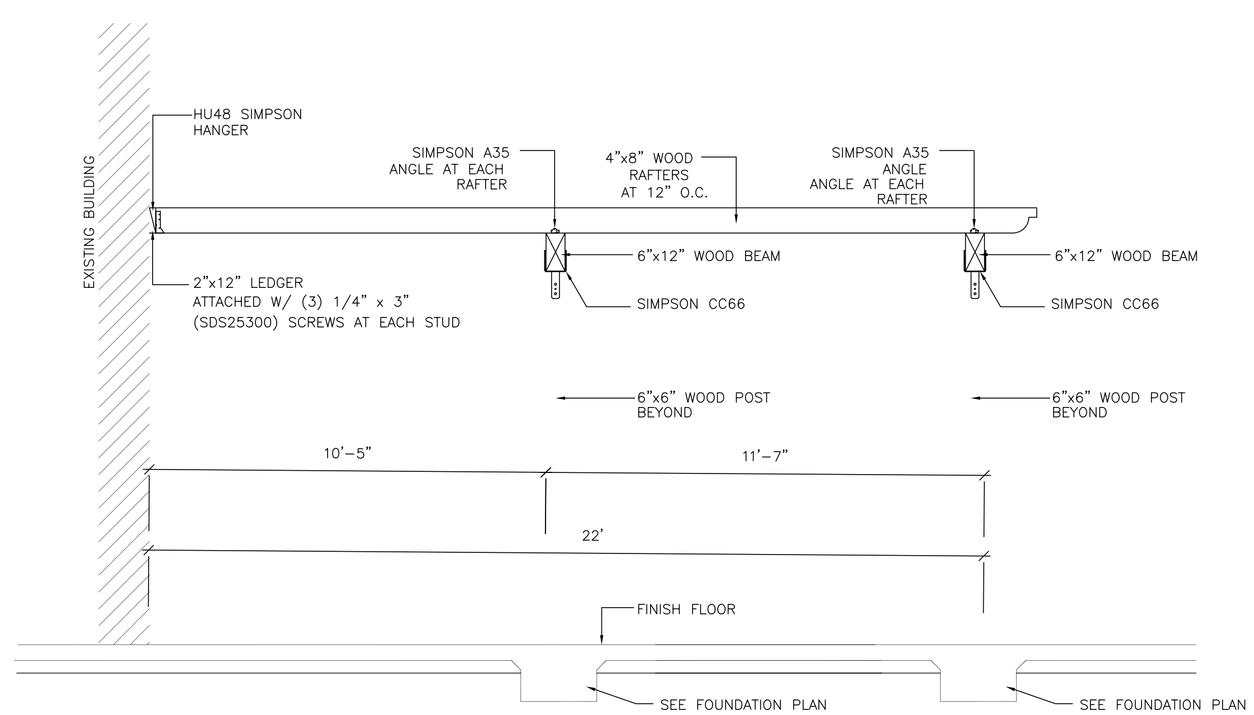

NOTE:

SEE EXTERIOR AND INTERIOR FINISHES ON ARCHITECTURAL PLANS.

SHEET: 10 OF: 10

DWN. BY: J.F.

REV. BY: R.M.

APP. BY: O.M.

LIBRARY EXPANSION PROJECT

FRAMING PLAN

IN THE CITY OF IMPERIAL, CALIFORNIA

DATE: 02/05/15

S9

SEAL: REGISTERED PROFESSIONAL ENGINEER ROBERTO C. MARTINEZ No. C-74475 CIVIL STATE OF CALIFORNIA

BY: ROBERTO C. MARTINEZ
653 W. MAIN ST. SUITE 103
EL CENTRO, CA 92243
DATE: 4/24/2015
R.C.E. NO. C-74475

REVISIONS

NO.	DESCRIPTION:	DATE:	BY:
△			
△			
△			

City of Imperial California