CITY OF IMPERIAL PUBLIC LIBRARY EXPANSION PROJECT

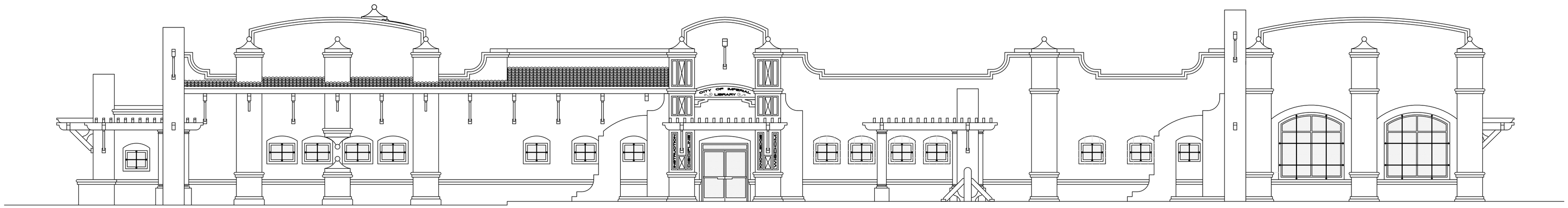

GOVERNING CODES

2013 CALIFORNIA BUILDING CODE
2013 CALIFORNIA MECHANICAL CODE
2013 CALIFORNIA PLUMBING CODE
2013 CALIFORNIA ELECTRICAL CODE

ASSESSOR'S PARCEL NO.

APN 064-051-004

EXITING CONCEPT:

OCCUPANTS OF THIS TENANT IMPROVEMENT WILL EITHER EXIT THEIR OFFICE, STUDY, READING OR CONSULTING AREA AND IMMEADIATELY BE IN A HALLWAY OR INTERVENING ROOM THAT WILL BE LEAD THE OCCUPANT DIRECTLY TO THE EXIT-ACCESS DOORWAY.

PER SECTION 1014.2 TRAVEL THROUGH INTERVENING ROOMS

MEANS OF EGRESS CALCS.

NEW ADDITION AREA:	4,874 S.F.
TOTAL AREA:	11,998 S.F.
NUMBER OF EXITS REQUIRED:	2
NUMBER OF EXITS PROVIDED:	6

PROJECT DIRECTORY

SHELL BUILDING OWNER:
CITY OF IMPERIAL
420 S. IMPERIAL AVE.
IMPERIAL, CA. 92251

ENGINEER:
VEXER ENGINEERING
653 W. MAIN ST. SUITE 103
EL CENTRO, CA. 92243
PHONE (760) 352-8100

ELECTRICAL DESIGNER:
JOSE LUIS REYES LEMUS P.E.
23 JEFFERNAN AVENUE
P.O. BOX 9015-930
CALEXICO, CA. 92231

TITLE 24:
GUILLERMO GARCIA
GMG GRAPHICS
ENERGY COMPLIANCE ANALYSIS
P.O. BOX 1560
EL CENTRO, CA. 92243
PHONE (760) 791-1961

GEOTECHNICAL ENGINEER:
JEFFREY O. LYON P.E.
LANDMARK CONSULTANTS, INC.
780 N. 4TH ST.
EL CENTRO CA. 92243
PHONE (760) 370-3000

PROJECT ADDRESS:

220 & 240 W. 9TH ST. IMPERIAL, CA. 92251

DECLARATION OF RESPONSIBLE CHARGE

I HEREBY DECLARE THAT I AM THE ENGINEER OF THE WORK OF THIS PROJECT, THAT I HAVE EXERCISED RESPONSIBLE CHARGE OVER THE DESIGN OF THE PROJECT AS DEFINED IN SECTION 6703 OF THE BUSINESS AND PROFESSIONS CODE AND THAT THE DESIGN IS CONSISTENT WITH CURRENT STANDARDS.

I UNDERSTAND THAT CHECK OF THE PROJECT DRAWINGS AND SPECIFICATIONS BY THE CITY OF IMPERIAL IS CONFINED TO REVIEW ONLY AND DOES NOT RELIEVE ME, AS ENGINEER OF WORK, OF MY RESPONSIBILITY FOR PROJECT DESIGN.

ROBERTO MARTINEZ
VEXER ENGINEERING
653 W. MAIN ST. SUITE 103
EL CENTRO, CA. 92243
PHONE (760) 352-8100

BY:
ROBERTO C. MARTINEZ P.E.
R.C.E. NO. 74,475

DATE:

EXPIRATION DATE: 12/31/15

SHEET INDEX

SHT.	NO.	CONTENT:	SHT.	NO.	CONTENT:
T1	1	TITLE SHEET	S1	15	FOUNDATION PLAN (WEST SIDE)
A1	2	SITE PLAN	S2	16	FOUNDATION PLAN (EAST SIDE)
G1	3	GENERAL NOTES	S3	17	FOOTING DETAILS
A2-1	4	DEMOLITION PLAN	S4	18	FRAMING PLAN (WEST SIDE)
A2-2	5	DEMOLITION PLAN	S5	19	FRAMING PLAN (EAST SIDE)
A3	6	DIMENSIONAL PLAN	S6	20	BUILDING SECTIONS
A4	7	ELEVATIONS	S7	21	BUILDING SECTIONS
A5	8	FLOOR PLAN	S8	22	BUILDING SECTIONS
A6	9	ROOF PLAN	S9	23	BUILDING SECTIONS
A7	10	REFLECTIVE CEILING PLAN	E01	24	ELECTRICAL MECHANICAL PLAN
A8	11	DOOR AND WINDOW PLAN	E02	25	POWER PLAN
A9	12	DETAILS	E03	26	LIGHTING PLAN
M1	13	MECHANICAL PLAN	E04	27	EXTERIOR LIGHTING PLAN
P1	14	PLUMBING PLAN			

SHELL BUILDING - PROJECT DATA

BUILDING USE:	PUBLIC LIBRARY
TYPE OF CONSTRUCTION:	V-B
OCCUPANCY GROUP:	A-3 ASSEMBLY
ALLOWABLE AREA:	6,000 S.F.
ACTUAL AREA:	7,250 S.F.
AREA INCREASE:	18,000 S.F. (200%)
NEW ADDITION:	4,874 S.F.
SPRINKLERS:	YES
LOT SIZE:	40,600 S.F.
PERIMETER:	860 FT.
PARKING REQUIRED:	EXIST. 7,250 S.F./190 = 38.15 => 39 STALLS NEW ADDITION: 4,874 S.F./190 = 25.17 => 26 STALLS = 70 STALLS
PARKING PROVIDED:	EXIST. 65 STALLS ADA STALLS = 65/25 = 2.6 => 3 STALLS
STORIES:	1 STORY
ZONING:	GENERAL COMMERCIAL

DEFERED ITEMS

- NEW PARKING /OFF-SITE IMPROVEMENTS/LANDSCAPE

VICINITY MAP

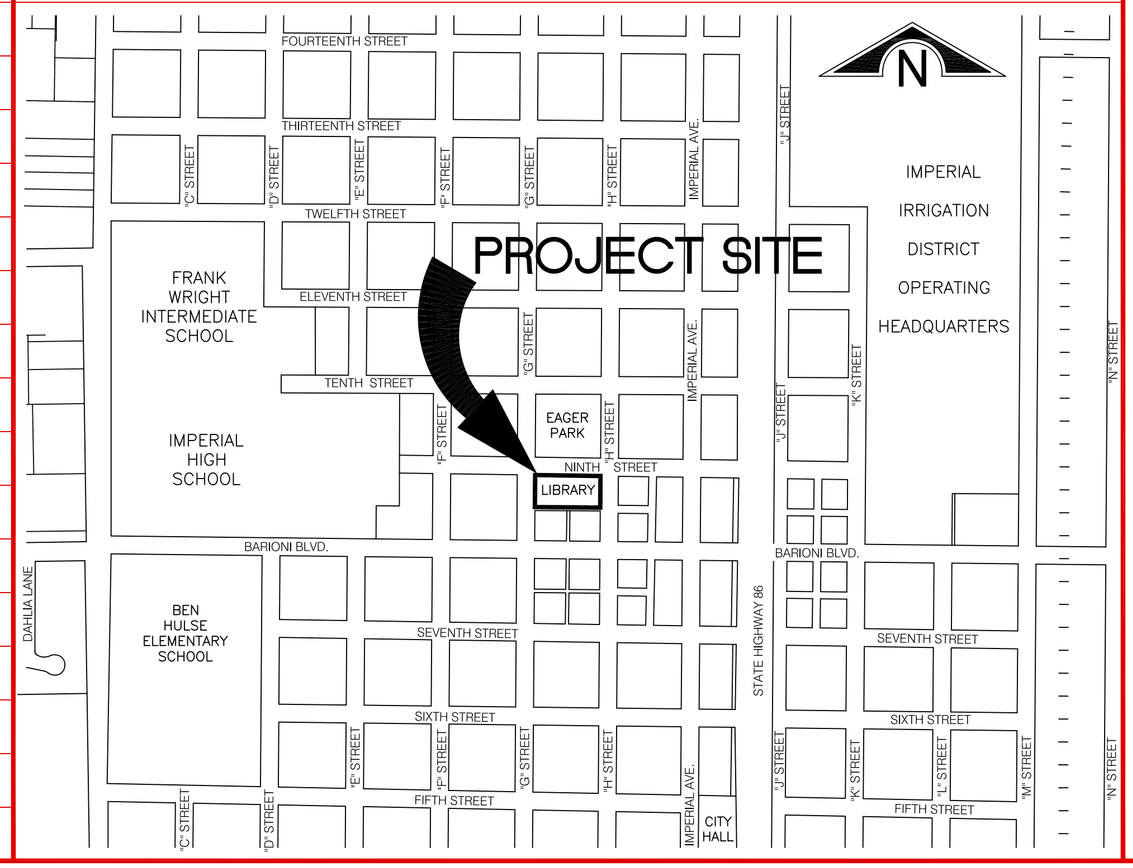

SHEET: 1
OF: 27
DWN. BY: A.A.
REV. BY: O.M.
APP. BY: J.G.

LIBRARY EXPANSION PROJECT

TITLE SHEET

IN THE CITY OF IMPERIAL, CALIFORNIA

DATE: 10/09/15

T1

REGISTERED PROFESSIONAL ENGINEER * ROBERTO C. MARTINEZ * No. C-74475 * STATE OF CALIFORNIA * CIVIL

SEAL:

BY: ROBERTO C. MARTINEZ
653 W. MAIN ST. SUITE 103
EL CENTRO, CA 92243
DATE: 05/14/15
R.C.E. NO. C-74475

REVISIONS

NO.	DESCRIPTION:	DATE:	BY:
1			
2			
3			

City of Imperial California

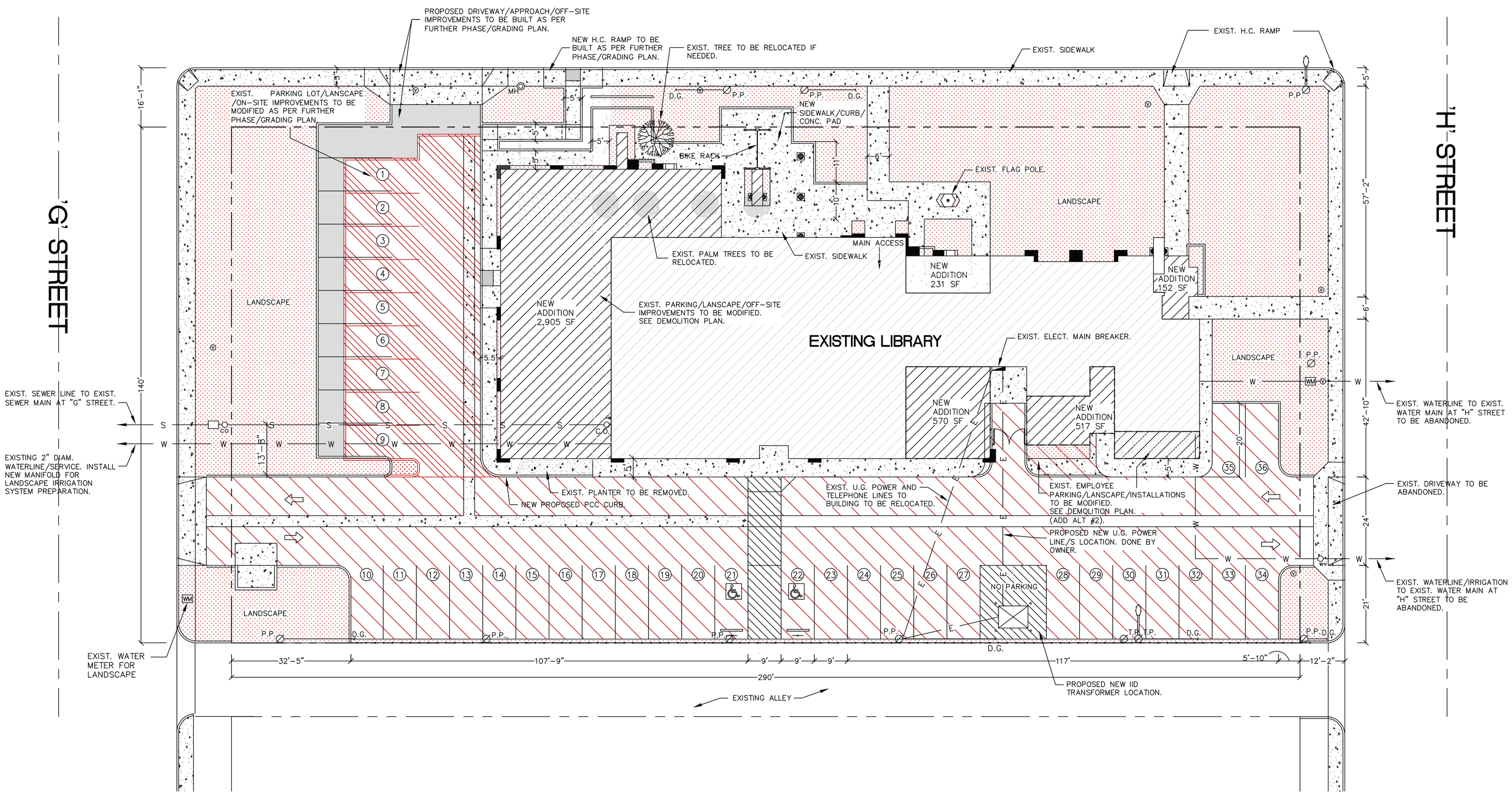

N

SITE PLAN

SCALE: 1/16" = 1'

LEGEND

SYMBOL	DESCRIPTION
	NEW ADDITION AREA.
	EXISTING LIBRARY AREA.
	IMPROVEMENTS TO BE MODIFIED/ BUILT AS PER FURTHER PHASE/GRADING PLAN.
	NEW SIDEWALK/CONCRETE SURFACE. COMPLY WITH CITY OF IMPERIAL STD. DETAIL NO. 25.
	EXISTING SIDEWALK/CONCRETE SURFACE.
	NO PARKING/PATH OF TRAVEL AREA.
	NEW AC PAVEMENT TO BE INSTALLED AS PER FURTHER PHASE/GRADING PLAN.
	NEW PCC CURB. COMPLY WITH CITY OF IMPERIAL STD. DETAIL NO. 21.
	FURTHER PROJECT PHASES TO BE OUT OF INITIAL BID AND TO BE CONSIDERED OPTIONAL ONLY. (ADD ALT #2).

SYMBOL	DESCRIPTION
	EXISTING OFF-SITE IMPROVEMENTS TO REMAIN
	NEW OFF-SITE IMPROVEMENTS
	EXISTING OFF-SITE IMPROVEMENTS TO BE REMOVED
E — E	EXISTING ELECTRICAL LINE
E — E	NEW ELECTRICAL LINE
S — S	EXISTING SEWER LINE
W — W	EXISTING WATERLINE
∅ P.P.	EXISTING POWER POLE
∅ T.P.	EXISTING TELEPHONE POLE
WM	EXISTING WATER METER
WV	EXISTING WATER VALVE
⊗	EXISTING CONTROL VALVE
C.O.	EXISTING SEWER CLEAN OUT
27	PARKING SPACE

LANDSCAPE LEGEND

SYMBOL	DESCRIPTION
	LANDSCAPE AREA.
	EXISTING LANDSCAPE AREA TO BE REMOVED.
	EXISTING TREE
	EXISTING PALM TREE

VICINITY MAP

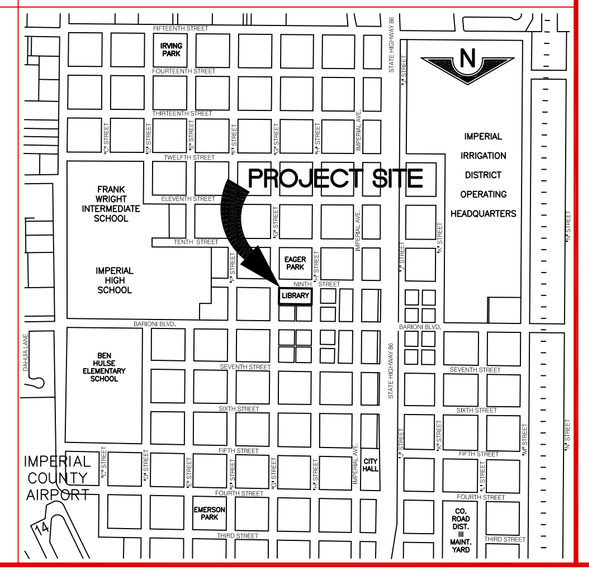

SHEET: 2 OF: 27
DWN. BY: A.A.
REV. BY: O.M.
APP. BY: X.X.

LIBRARY EXPANSION PROJECT

SITE PLAN

IN THE CITY OF IMPERIAL, CALIFORNIA

DATE: 10/09/15

A1

REGISTERED PROFESSIONAL ENGINEER — ROBERTO C. MARTINEZ — No. C-74475 — STATE OF CALIFORNIA

SEAL:

BY: ROBERTO C. MARTINEZ
653 W. MAIN ST. SUITE 103
EL CENTRO, CA 92243
DATE: 05/14/15
R.C.E. NO. C-74475

REVISIONS

NO.	DESCRIPTION:	DATE:	BY:
1			
2			
3			

City of Imperial California

ACCESSIBILITY NOTES:

NO HAZARDOUS MATERIALS WILL BE STORED AND/OR USED WITHIN THE BUILDING WHICH EXCEED THE QUANTITIES

THE FOLLOWING DISABLED ACCESS ITEMS ARE TAKEN FROM THE 199 EDITION OF CALIFORNIA ADMINISTRATIVE CODE TITLE 24, ALL PUBLICLY AND PRIVATELY FUNDED PUBLIC ACCOMMODATIONS AND COMMERCIAL FACILITIES SHALL BE ACCESSIBLE TO PERSONS WITH PHYSICAL DISABILITIES AS FOLLOW:

I). ANY BLDG.,STRUCTURE,FACILITY,COMPLEX,OR IMPROVED AREA,OR PORTIONS THEREOF, WHICH ARE USED BY THE GENERAL PUBLIC.

II). ANY SANITARY FACILITIES WHICH ARE MADE AVAILABLE FOR THE PUBLIC,CLIENTS, EMPLOYEES IN SUCH ACCOMMODATION OR FACILITIES.

III). ANY CURB OR SIDEWALK INTENDED FOR PUBLIC USE THAT IS CONSTRUCTED WITH PRIVATE FUNDS.

TO ASSURE THAT BARRIER-FREE DESIGN IS INCORPORATED IN ALL BUILDINGS, FACILITIES,SITE WORKS AND OTHER IMPROVMENTS,THESE STANDARDS TO BE APPLY TO ALL ADDITIONS,ALTERATIONS AND STRUCTURAL REPAIRS.
THESE STANDARDS INCORPORATE THE REQUIREMENTS COVERED IN TITLE II AND III OF THE AMERICAN WITH DISABILITIES ACT OF 1990.

1. THE CONTRACTOR SHALL VERIFY ALL DIMENSION BEFORE STARTING ANY WORK, AND NOTIFY THE ENGINEER IMMEDIATELY OF ANY DISCREPANCIES FOUND.
2. SPECIFIC NOTES AND DETAILS SHALL TAKE PRECEDENCE OVER THESE GENERAL NOTES AND THE TYPICAL DETAILS USED SHALL BE THE SAME AS FOR OTHER SIMILAR WORK.
3. WHERE NO CONSTRUCTION DETAILS ARE SHOWN OR NOTED FOR ANY PART OF THE WORK, THE DETAILS USED SHALL BE THE SAME AS FOR OTHER SIMILAR WORK.
4. THE DESIGN IS BASED ON THE 2010 CALIFORNIA BUILDING CODE WHICH ADOPT THE 2009 IBC,2009 UMC, 2009 UPC AND THE 2009 NEC.
5. NEITHER THE OWNER NOR THE ENGINEER WILL ENFORCE SAFETY MEASURES OR REGULATIONS. THE CONTRACTOR SHALL DESIGN, CONSTRUCT AND MAINTAIN ALL SAFETY DEVICES, INCLUDING SHORING AND BRACING, AND SHALL BE SOLELY RESPONSIBLE FOR CONFORMING TO ALL LOCAL, STATE AND FEDERL SAFETY AND HEALTH STANDARDS, LAWS AND REGULATIONS.
6. ANY DESIRE CHANGE ON THE APPROVED SET OF CONTRACT DRAWINGS MUST BE REQUESTED IN WRITTING TO ENGINEER OR RECORD FOR THEIR REVIEW AND APPROVAL.
7.– PENETRATIONS OF FIRE-RESISTIVE WALLS, FLOOR-CEILING AND ROOF CEILING SHALL BE PROTECTED AS REQUIRED IN CBC SECTION 709 AND 710.
8.– ALL EXITS ARE TO BE OPENABLE FROM INSIDE WITHOUT THE USE OF A KEY OR SPECIAL KNOWLEDGE.
9.– EACH GRADE-LEVEL EXIT DOOR SHALL HAVE A TACTILE EXIT SIGN HAVING THE WORD "EXIT" CBC SEC. 1003.2.8.6.1
10.– WHERE PERMANENT IDENTIFICATION IS PROVIDED FOR ROOMS AND SPACES, RAISED LETTERS SHALL ALSO BE PROVIDED AND ACCOMPANIED BY BRAILLE CBC SECT. 1117B.5
11.– SIGNAGE REQUIREMENTS OF CBC 1117B.5 WILL BE SATISFIED
12.– REGARDLESS OF OCCUPANT LOAD, A FLOOR OR LANDING NOT MORE THAN 1 INCH (1/2–INCH IF DISABELED ACCESS IS REQUIRED) BELOW THE THRESHOLD IS REQUIRED ON EACH SIDE OF AN EXIT DOOR. CBC SECTION 1003.3.1.6.

ENERGY CONSERVATION NOTES:

1). INSUL. MATLS. SHALL MEET CA. QUALITY STD. AS PER SEC. 118 B.E.E.S
2). DOORS & WIND. SHALL MEET MIN. INFILTRATION REQ. PER SEC. 116 BEES
3). ALL PIPING AND DUCTWORK SHALL BE INSULATED CONSISTENT W/THE REQ. OF SEC. 114 B.E.E.S. & TABLE U.M.C.
4). ALL HVAC SYSTEMS SHALL MEET THE CONTROL REQUIREMENTS PER SECTION 115 B.E.E.S.
5). ALL HVAC EQUIPMENT AND APPLIANCES SHALL MEET REQUIREMENTS PER SECTION 115 B.E.E.S.

ELECTRICAL REQUIREMENTS:

1). 15,20,& 30 AMP.RECEPTACLE OUTLETS SHALL BE INSTALLED NOT LESS THAN 12" ABOVE FIN. FLOOR 3–210–50 (e).
2). CENTER OF SWITCHES SHALL BE LOCATED NOT LESS THAN 36" NOT MORE THAN 48" ABOVE THE F.FLOOR 3–380–8(c)

ACOUSTICAL REQUIREMENTS:

1.– REVERBERATION CONTROL:
PRIVATE OFFICES AND CONFERENCE ROOMS USING SUSPENDED ACOUSTICAL CEILINGS SHALL HAVE A NOISE REDUCTION COEFFICIENT (NRC) OF NOT LESS THAN 0.65 IN ACCORDANCE WITH ASTM C–423. OPEN OFFICE USING SUSPENDED ACOUSTICAL CEILINGS SHALL HAVE AN NRC OF NOT LESS THAN 0.75. PRIVATE OFFICES, CONFERENCE ROOMS AND OPEN OFFICES USING ACOUSTICAL CLOUD OR ACOUSTICAL WALL PANELS WITH A MINIMUM OF 70% COVERAGE SHALL HAVE AN NRC OF NOT LESS THAN 0.85.

2.– AMBIENT NOISE CONTROL:
AMBIENT NOISE FROM MECHANICAL EQUIPMENT SHALL NOT EXCEED NOISE CRITERIA CURVE NC–35 IN ACCORDING TO THE ASHRAE HANDBOOK OF FUNDAMENTALS IN OFFICES AND CONFERENCE ROOMS; NC–40 IN CORRIDORS, CAFETERIAS, LOBBIES AND TOILETS; NC–50 IN OTHER SPACES.

3.– NOISE ISOLATION:
ROOMS SEPARATED FROM ADJACENT SPACES BY CEILING–HIGH PARTITIONS (NOT INCLUDING DOORS) SHALL NOT BE LESS THAN THE FOLLOWING NOISE ISOLATION CLASS (NIC) STANDARDS WHEN TESTED IN ACCORDANCE WITH ASTM E–336:
A.– CONFERENCE ROOMS: NIC–40
B.– OFFICES: NIC–35
ALL SURROUNDING WALLS AND DOOR(S) LEADING INTO THE MULTIPURPOSE ROOM (MPR), MUST HAVE A MINIMUM SOUND TRANSMISSION COEFFICIENT (STC) OF 45 OR BETTER.

RECYCLED CONTENT PRODUCTS:

COMPLY TO EXTENT FEASIBLE WITH THE RESOURCE CONSERVATION AND RECOVERY ACT (RCRA), SECTION 6002, 1976. RECYCLED CONTENT PRODUCTS SHALL BE USED AS INDICATED AND DESIGNATED BY THE U.S. ENVIRONTMENTAL PROTECTION AGENCY (EPA) IN THE COMPREHENSIVE PROCUREMENT GUIDELINES (CPG), 40 CPR PART 247, AND ITS ACCOMPANYING RECOVERED MATERIALS ADVISORY NOTICE (RMAN).

ENVIRONTMENTALLY PREFERABLE BUILDING PRODUCTS/MATERIALS:

1.– ENVIRONTMENTALLY PREFERBLE PRODUCTS AND MATERIALS SHALL BE USED AND LIFECYCLE ANALYSIS OF THE PRODUCT SHALL BE COSIDERED.
2.–ENVIRONTMENTALLY PREFERBLE PRODUCTS AND MATERIALS SHALL DO ONE OR MORE OF THE FOLLOWING:
A.– CONTAIN RECYCLED MATERIAL, ARE BIOBASED, ARE RAPIDLY RENEWABLE (10–YEAR OR SHORTER GROWTH CYCLE), OR HAVE POSITIVE ENVIRONMENTAL ATTRIBUTES.
B.– MINIMIZE THE CONSUMPTION OF RESOURCES, ENERGY AND WATER.
C.– PREVENT THE CREATION OF SOLID WASTE, AIR POLLUTION OR WATER POLLUTION.
D.– PROMOTE THE USE OF NON–TOXIC SUBSTANCES AND AVOID TOXIC MATERIALS OR PROCESSES.
E.– ENCOURAGE TO USE PRODUCTS THAT ARE REGIONALLY EXTRACTED AND MANUFACTURED.

WOOD PRODUCTS:

1.– ALL NEW WOOD PRODUCT INSTALLATIONS IS ENCOURAGED TO USE INDEPENENTALY CERTIFIED FOREST PRODUCTS. REFER TO THE FOREST CERTIFICATION RESOURCE CENTER, THE FOREST STEWARDSHIP COUNCIL UNITED STATES OR THE SUSTAINABLE FORESTRY INITIATIVE.
2.– ALL NEW WOOD PRODUCTS SHALL NOT CONTAIN WOOD FROM ENDENGERED WOOD SPECIES, AS LISTED BY THE CONVENTION ON INTERNATIONAL TRADE IN ENDENGERED SPECIES.

GENERAL BIDDING NOTES

GENERAL CONTRACTOR SHALL PROVIDE THE FOLLOWING DOCUMENTS FOR REVIEW AND APPROVAL TO LOCAL BUILDING AUTHORITY AND SECURE PERMITS IF REQUIRED.

1.– THE FIRE SPRINKLER DRAWINGS AS TO COMPLY WITH CURRENT APPLICABLE CODES.

QUALITY ASSURANCE

1.– INSTALL AND ASSEMBLIES ALL MATERIALS SHOW ON THESE PLANS AS TO COMPLY WITH ALL APPLICABLE CODES & STANDARDS AND WITH REQUIREMENTS OF LOCAL AGENCIES HSUING JURISDICTION.

SPACE ALLOWANCES N.T.S.

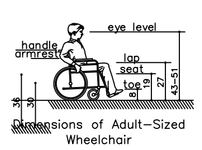

Dimensions of Adult–Sized Wheelchair

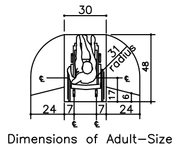

Dimensions of Adult–Sized Wheelchair

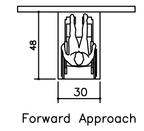

Forward Approach

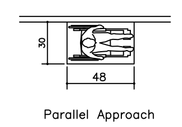

Parallel Approach

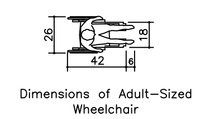

Dimensions of Adult–Sized Wheelchair

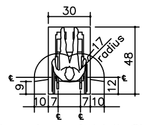

Dimensions of Adult–Sized Wheelchair

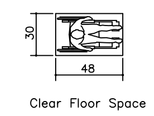

Clear Floor Space

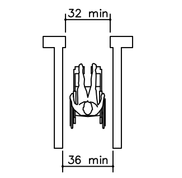

Minimum Clear Width for Single Wheelchair

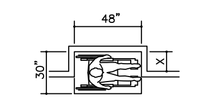

Clear Floor Space in Alcove

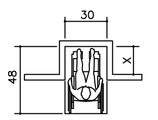

Clear Floor Space in Alcove

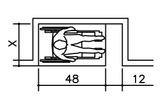

Additional Maneuvering Clearance for Alcove

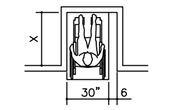

Additional Maneuvering Clearance for Alcove

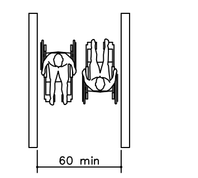

Minimum Clear Width for Two Wheelchairs

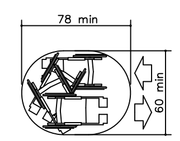

Space Needed for U–turn

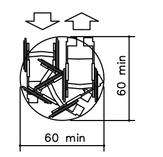

Wheelchair Turning Space

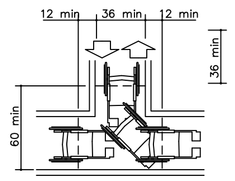

T–Shaped Space for 180° Turns

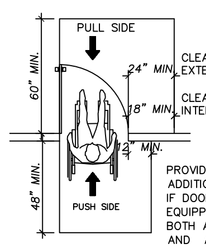

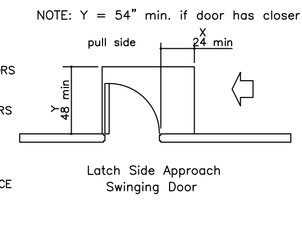

Latch Side Approach Swinging Door

Side Approach – Swinging Door

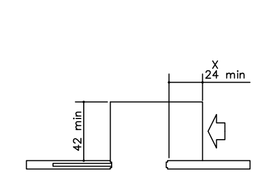

Latch Side Approach – Sliding or Folding Doors

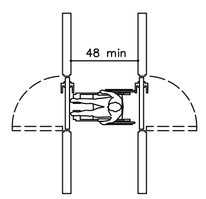

Two Hinged Doors in Series

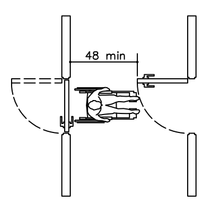

Two Hinged Doors in Series

ACCESSIBLE ROUTE

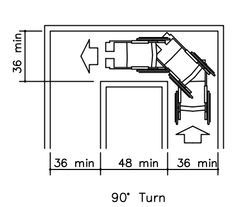

90° Turn

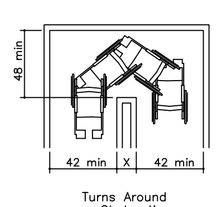

Turns Around an Obstruction

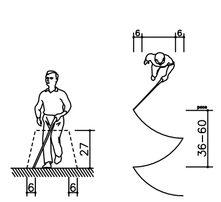

Cone Technique

ACCESSIBILITY NOTES (CONT):

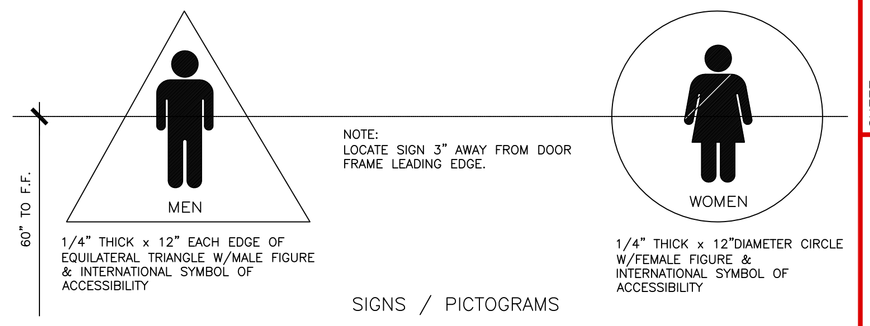

SIGNS / PICTOGRAMS

LETTERS & NUMBERS:
1. WIDTH TO HEIGHT RATIO BETWEEN 3:5 AND 1:1.
2. STROKE WIDTH TO HEIGHT BETWEEN 1:5 AND 1:10
3. CONTRAST CHARACTERS & SYMBOLS W/BACKGROUND.

SIGNS / PICTOGRAMS
5. PICTOGRAMS/PICTORIAL SYMBOL SIGNS SHALL BE ACCOMPAINED BY THE EQUIVALENT VERBAL DESCRIPTION PLACED DIRECTLY BELOW THE PICTOGRAM THE BORDER DIMENSION SHALL BE 6" MIN. HEIGHT.
6. CHARACTERS & BACKGROUNDS SHALL BE OF–NON–GLARE CONTRASTING COLORS.
7. SIGNS/PICTOGRAMS SHALL BE INTALLED ON THE WALL ADJACENT TO DOOR LEADING TO THE ROOMOR SPACE THEY DESCRIBE AND @60" AFF TO SIGN CENTERLINE & WHERE A PERSON MAY APPROACH WITHIN 3" OF SIGNAGE W/OUT ENCOUNTERING PROTRUDING OBJECTS OR STANDING W/IN THE DOOR SWING AREA.
8. VERTICAL CLEARANCE @ SUSPENDED SIGNS W/MIN. HEADROOM OF 80" REQUIRE MIN. 3" CHARACTER HEIGHT MEASURED BY USING UPPERCASE "X" CHARACTERS & NUMBERS SHALL BE SIZED ACCORDING TO VIEWING DISTANCE FROM WICH READ. LOWER CASE CHARACTERS PERMITTED.

SIGN LOCATIONS:
9. ALL ACCESSIBLE ENTRANCES IDENTIFIED WITH MINIMUM OF ONE STANDARD SIGN.
10. ADDITIONAL DIRECTIONAL SIGNS ALONG ACCESSIBLE PATH OF TRAVEL ARE REQUIRED.
11. BUILDINGS REMODELED TO PROVIDE ACCESSIBLE SANITARY FACILITIES FOR PUBLIC USE SHALL HAVE INFORMATION POSTED IN THE LOBBY AS PART OF THE BUILDING DIRECTORY.

INTERNATIONAL SYMBOL OFF ACCESSIBILITY:
12. STANDARD USED TO IDENTIFY ACCESIBLE FACILITIES.
13. WHITE FIGURE ON BLUE BACKGROUND, COLOR #15090 ON FEDERAL STANDARD #595A.
14. WHEN ENFORCING AGENCY DETERMINES, IF APPROPIATE, SPECIAL DESIGNS AND COLORS MAY BE APPROVED.

BRAILLE:
15. USE CONTRASTED GRADE 2 BRAILLE DOTS TO BE .01 INCH ON CENTER IN EACH CELL.
16. .02 INCH SPACE BETWEEN CELLS.
17. DOTS RAISED MIN. .0025 INCH ABOVE BACKGROUND.

SINGLE ACCOMODATION TOILET

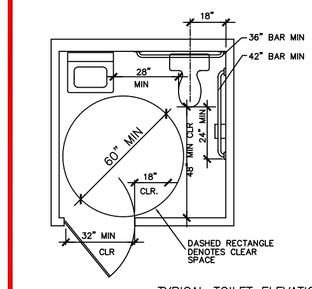

CLEARANCE NOTES:
A. 28" CLR. BETWEEN LAVATORY & EDGE OF WATER CLOSET TANK LID WHEN TANK WATER CLOSET OCCURS.
B. 28" MIN. CLR. TO EDGE OF BOWL WHEN FLUSH VALVE WATER CLOSET OCCURS (28" MIN. CLEAR BETWEEN LAVATORY TO FURTHEST PROTUDING EDGE OF WATER CLOSET, TYPICAL).
NOTES:
1. PROVIDE PRIVACY DOOR LOCK WHEN IT IS A PRIVATE TOILET OR FOR UNISEX USE.
2. GRAB BARS, SEE TYPICAL ACCESIBILITY NOTES SHEET.

GRAB BAR DETAIL

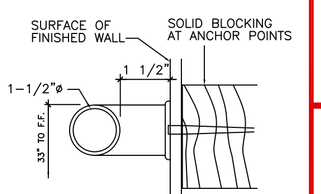

NOTE:
GRAB BAR SHALL PROVIDE 250 LB. PER LINEAR FT. SUPPORT

TYPICAL TOILET ELEVATIONS

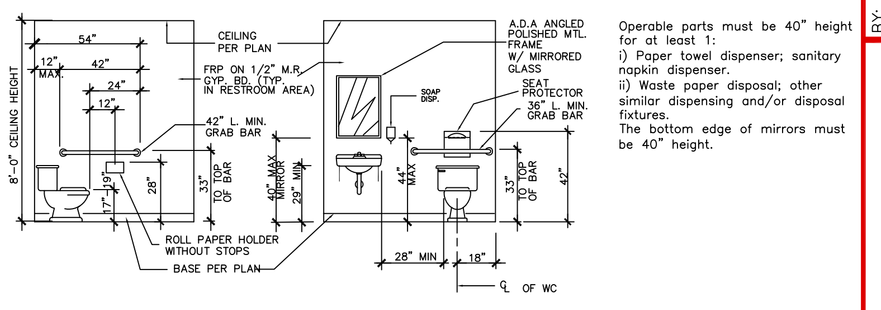

Operable parts must be 40" height for at least 1:
i) Paper towel dispenser; sanitary napkin dispenser.
ii) Waste paper disposal; other similar dispensing and/or disposal fixtures.
The bottom edge of mirrors must be 40" height.

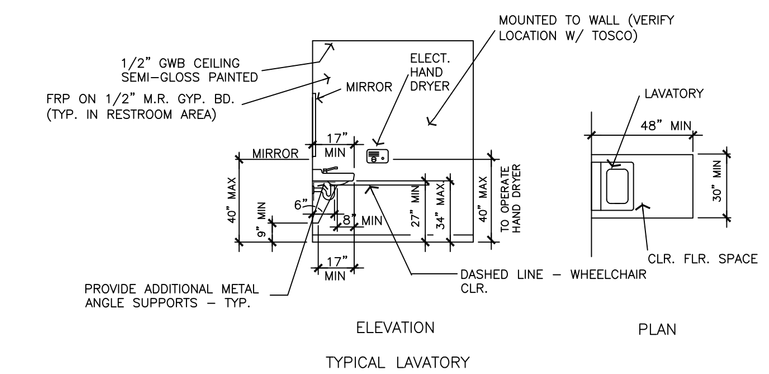

ELEVATION PLAN

TYPICAL LAVATORY

SANITARY FACILITIES:

The doorways leading to sanitary facilities shall be identified, per Section 1115b.5, as follows:
a) an equilateral triangle 1/4" thick with edges 12" long and a vortex pointing upward at men's rest rooms.
b) A circle 1/4" thick, 12" in diameter at women's rest rooms.
c) A 12" diameter circle with a triangle superimposed on the circle and within the 12"diameter at unisex restrooms.
d) The required symbols shall be centered on the door at height of 60".
e) Braile signage shall also be located on the wall adjacent to the latch outside of the doorways leading to the sanitary facilities, per Section 1117B.5.9.

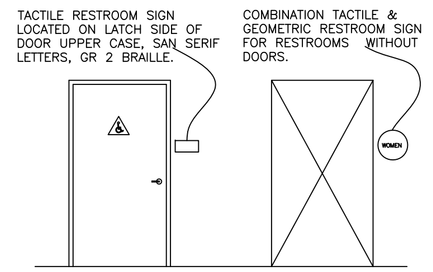

RESTROOM SIGNAGE.

SHEET: 3
OF: 27
DWN. BY: A.A.
REV. BY: O.M.
APP. BY: J.G.

LIBRARY EXPANSION PROJECT

TITLE SHEET

DATE: 10/09/15

IN THE CITY OF IMPERIAL, CALIFORNIA

G1

SEAL:

REVISIONS

NO.	DESCRIPTION:	DATE:	BY:
◁			
◁			
◁			

BY: ROBERTO C. MARTINEZ
653 W. MAIN ST. SUITE 103
EL CENTRO, CA 92243
DATE: 05/14/15
R.C.E. NO. C–74475

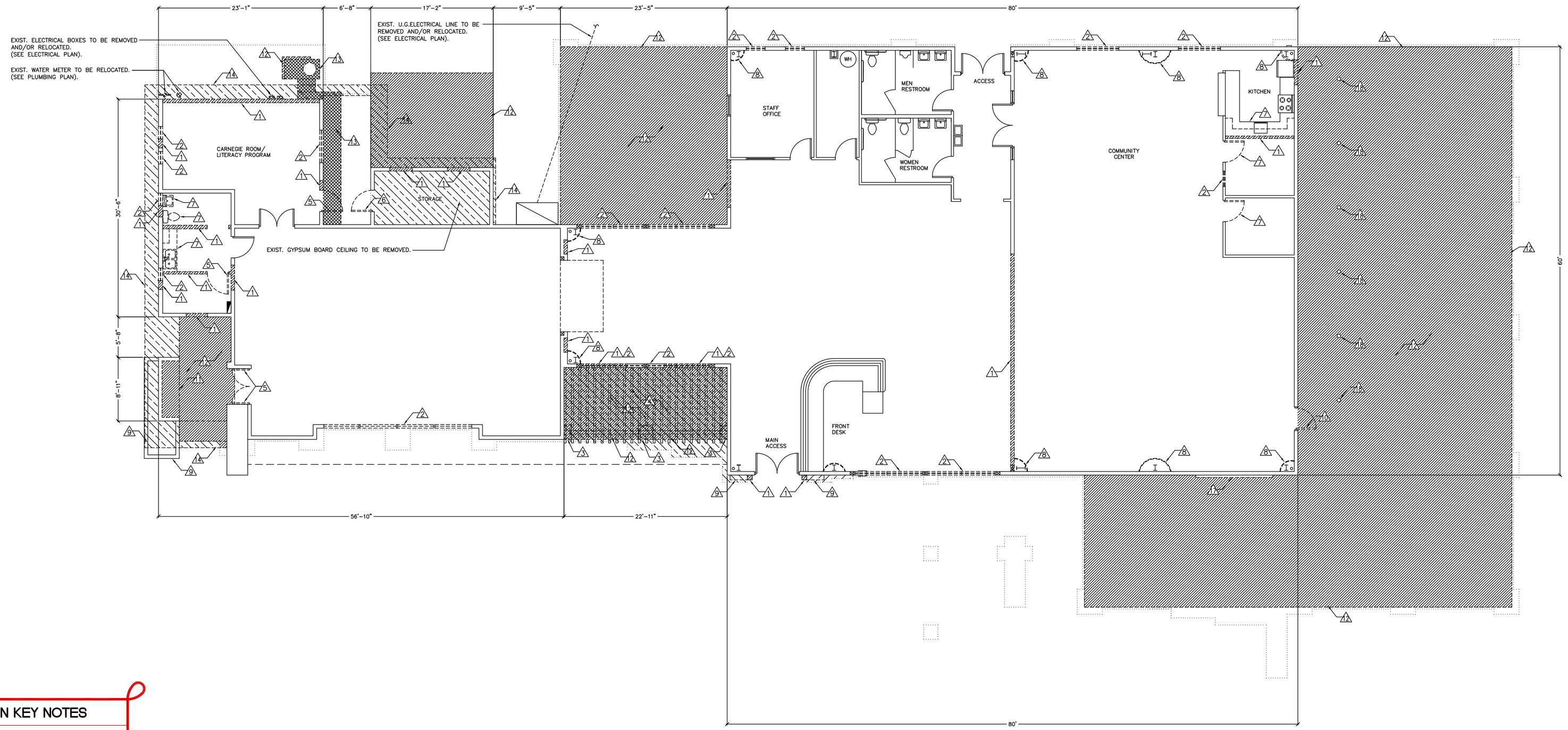

DEMOLITION KEY NOTES

NO.	DESCRIPTION
1	SAWCUT, REMOVE AND DISPOSE EXISTING WALL AS SHOWN ON PLAN.
2	SAWCUT, REMOVE AND DISPOSE EXISTING WINDOW AND METAL FRAME AS SHOWN ON PLAN.
3	REMOVE AND STORE EXISTING COLUMN FOR REUSE.
4	REMOVE AND STORE EXISTING PATIO STRUCTURE/TRELLIS.
5	REMOVE AND DISPOSE EXISTING DOOR AND FRAME.
6	REINSTALL EXIST DOOR TO SWING REVERSE AS PER FLOOR PLAN.
7	REMOVE AND DISPOSE EXISTING CABINET/COUNTER, FURNITURE SYSTEM AND/OR FIXTURES, ETC. AS SHOWN ON PLAN.
8	REMOVE AND DISPOSE COLUMN COVER AS SHOWN ON PLAN.
9	REMOVE EXISTING ROCK VENEER AS SHOWN ON PLAN.
10	REMOVE AND STORE EXISTING DOOR AND FRAME TO BE REUSED AT NEW ADDITION (COMMUNITY LOUNGE AREA).
11	SAWCUT, REMOVE AND DISPOSE EXISTING WALL AND/OR STRUCTURE AS TO INCREASE INTERNAL SPACE FOR NEW OFFICE AND COMPLETE EXISTING WALL AS SHOWN ON PLAN.
12	SAWCUT, REMOVE AND DISPOSE EXISTING AC AND/OR PCC ELEMENTS AS SHOWN ON PLAN.
13	REMOVE AND STORE EXISTING AC UNIT AND DUCT SYSTEM AS SHOWN ON PLAN.
14	SAWCUT, REMOVE AND DISPOSE EXISTING WOOD OVERHANG AS SHOWN ON PLAN.
15	REMOVE AND DISPOSE EXISTING WOOD TRIM AS SHOWN ON PLAN.
16	REMOVE AND DISPOSE EXISTING FOAM TRIM AS SHOWN ON PLAN.
17	REMOVE AND STORE EXISTING LETTER SIGN.
18	REMOVE AND STORE EXISTING BOLLARDS.

DEMOLITION LEGEND

	SAWCUT, DEMOLISH, REMOVE AND DISPOSE EXISTING MASONRY OR WOOD WALLS; ASPHALT PADS AND/OR CONCRETE ELEMENTS AS NOTED.
	SAWCUT, REMOVE AND DISPOSE EXISTING WOOD OVERHANG, PATIO/TRELLIS, CEILING AS NOTED/SHOWN.
	REMOVE, STORE AND/OR DISPOSE MECHANICAL, PLUMBING AND ELECTRICAL DEVICES/SYSTEMS AS NOTED/SHOWN. (SEE MECHANICAL, PLUMBING AND ELECTRICAL PLAN.
	SAWCUT, REMOVE AND DISPOSE EXISTING WINDOWS, DOORS, FRAMES AND/OR FURNITURE AS SHOWN ON PLAN.
	NEW ADDITION AREA LIMIT.

N

DEMOLITION PLAN

LOWER LEVEL

SCALE: 1/8" = 1'

SHEET: 4
OF: 27
DWN. BY: A.A.
REV. BY: O.M.
APP. BY: J.G.

LIBRARY EXPANSION PROJECT

DEMOLITION PLAN

IN THE CITY OF IMPERIAL, CALIFORNIA

DATE: 10/09/15

A2-1

REGISTERED PROFESSIONAL ENGINEER ROBERTO C. MARTINEZ No. C-74475 STATE OF CALIFORNIA

SEAL:

BY: ROBERTO C. MARTINEZ
653 W. MAIN ST. SUITE 103
EL CENTRO, CA 92243
DATE: 05/14/15
R.C.E. NO. C-74475

REVISIONS

NO.	DESCRIPTION:	DATE:	BY:
1			
2			
3			

City of Imperial California

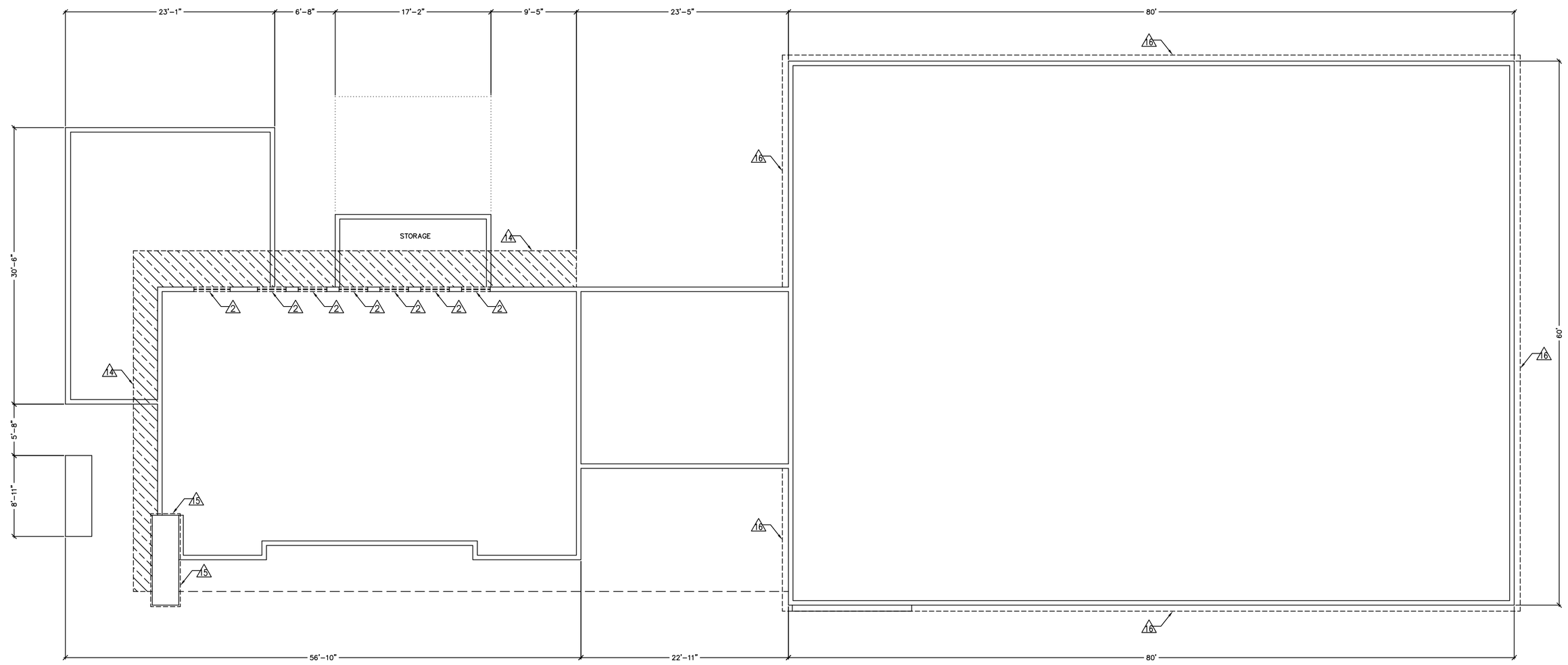

DEMOLITION KEY NOTES

NO.	DESCRIPTION
1	SAWCUT, REMOVE AND DISPOSE EXISTING WALL AS SHOWN ON PLAN.
2	SAWCUT, REMOVE AND DISPOSE EXISTING WINDOW AND METAL FRAME AS SHOWN ON PLAN.
3	REMOVE AND STORE EXISTING COLUMN FOR REUSE.
4	REMOVE AND STORE EXISTING PATIO STRUCTURE/TRELLIS.
5	REMOVE AND DISPOSE EXISTING DOOR AND FRAME.
6	REINSTALL EXIST DOOR TO SWING REVERSE AS PER FLOOR PLAN.
7	REMOVE AND DISPOSE EXISTING CABINET/COUNTER, FURNITURE SYSTEM AND/OR FIXTURES, ETC. AS SHOWN ON PLAN.
8	REMOVE AND DISPOSE COLUMN COVER AS SHOWN ON PLAN.
9	REMOVE EXISTING ROCK VENEER AS SHOWN ON PLAN.
10	REMOVE AND STORE EXISTING DOOR AND FRAME TO BE REUSED AT NEW ADDITION (COMMUNITY LOUNGE AREA).
11	SAWCUT, REMOVE AND DISPOSE EXISTING WALL AND/OR STRUCTURE AS TO INCREASE INTERNAL SPACE FOR NEW OFFICE AND COMPLETE EXISTING WALL AS SHOWN ON PLAN.
12	SAWCUT, REMOVE AND DISPOSE EXISTING AC AND/OR PCC ELEMENTS AS SHOWN ON PLAN.
13	REMOVE AND STORE EXISTING AC UNIT AND DUCT SYSTEM AS SHOWN ON PLAN.
14	SAWCUT, REMOVE AND DISPOSE EXISTING WOOD OVERHANG AS SHOWN ON PLAN.
15	REMOVE AND DISPOSE EXISTING WOOD TRIM AS SHOWN ON PLAN.
16	REMOVE AND DISPOSE EXISTING FOAM TRIM AS SHOWN ON PLAN.
17	REMOVE AND STORE EXISTING LETTER SIGN.
18	REMOVE AND STORE EXISTING BOLLARDS.

DEMOLITION LEGEND

	SAWCUT, DEMOLISH, REMOVE AND DISPOSE EXISTING MASONRY OR WOOD WALLS; ASPHALT PADS AND/OR CONCRETE ELEMENTS AS NOTED.
	SAWCUT, REMOVE AND DISPOSE EXISTING WOOD OVERHANG, PATIO/TRELLIS AS NOTED/SHOWN.
	REMOVE, STORE AND/OR DISPOSE MECHANICAL, PLUMBING AND ELECTRICAL DEVICES/SYSTEMS AS NOTED/SHOWN. (SEE MECHANICAL, PLUMBING AND ELECTRICAL PLAN.
	SAWCUT, REMOVE AND DISPOSE EXISTING WINDOWS, DOORS, FRAMES AND/OR FURNITURE AS SHOWN ON PLAN.
	NEW ADDITION AREA LIMIT.

N

DEMOLITION PLAN

UPPER LEVEL

SCALE: 1/8" = 1'

SHEET: 5 OF: 27

DWN. BY: A.A.
REV. BY: O.M.
APP. BY: J.G.

LIBRARY EXPANSION PROJECT

DEMOLITION PLAN

IN THE CITY OF IMPERIAL, CALIFORNIA

DATE: 10/09/15

A2-2

REGISTERED PROFESSIONAL ENGINEER ROBERTO C. MARTINEZ No. C-74475 CIVIL STATE OF CALIFORNIA

SEAL:

BY: ROBERTO C. MARTINEZ
653 W. MAIN ST. SUITE 103
EL CENTRO, CA 92243
DATE: 05/14/15
R.C.E. NO. C-74475

REVISIONS

NO.	DESCRIPTION:	DATE:	BY:
△			
△			
△			

City of Imperial California

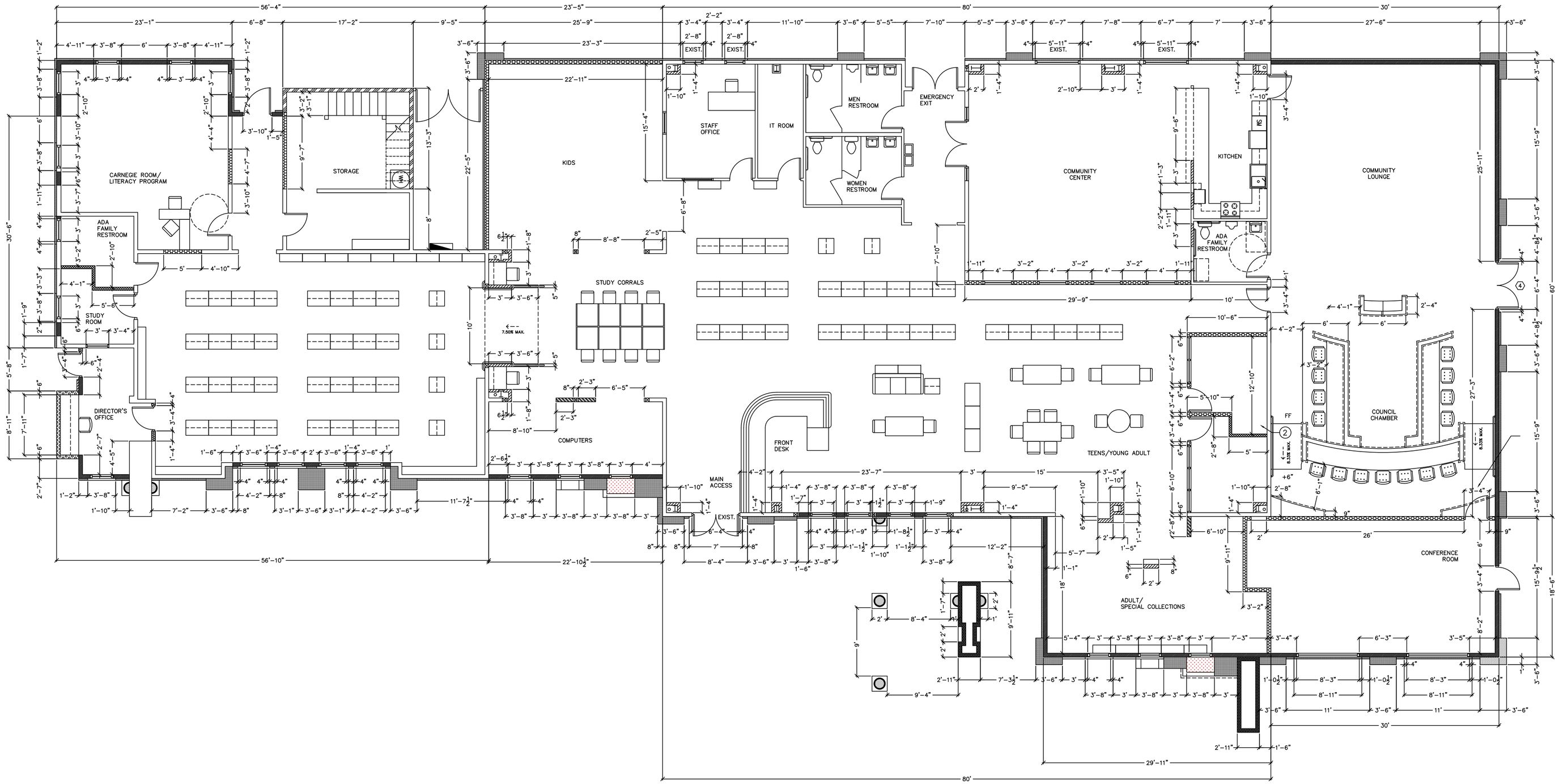

N

DIMENSIONAL PLAN
LOWER LEVEL

SCALE: 1/8" = 1'

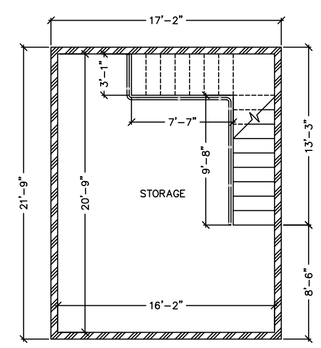

N

DIMENSIONAL PLAN
UPPER LEVEL

SCALE: 1/8" = 1'

SHEET: 6
OF: 27
DWN. BY: A.A.
REV. BY: O.M.
APP. BY: J.G.

LIBRARY EXPANSION PROJECT
DIMENSIONAL PLAN
IN THE CITY OF IMPERIAL, CALIFORNIA

DATE: 05/14/15

A3

PROFESSIONAL ENGINEER · REGISTERED · ROBERTO C. MARTINEZ · No. C-74475 · STATE OF CALIFORNIA · CIVIL

SEAL:

BY: ROBERTO C. MARTINEZ
653 W. MAIN ST. SUITE 103
EL CENTRO, CA 92243
DATE: 05/14/15
R.C.E. NO. C-74475

REVISIONS

NO.	DESCRIPTION:	DATE:	BY:
1			
2			
3			

City of Imperial California

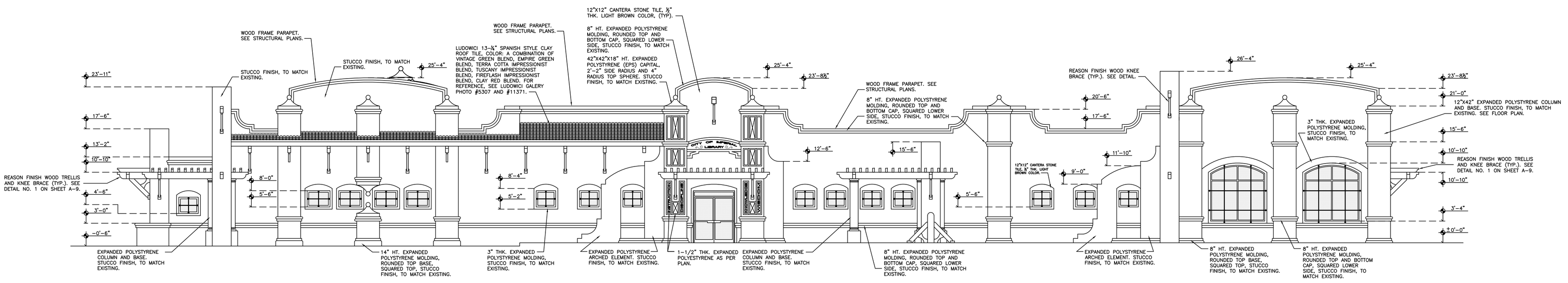

NORTH ELEVATION
NOT TO SCALE

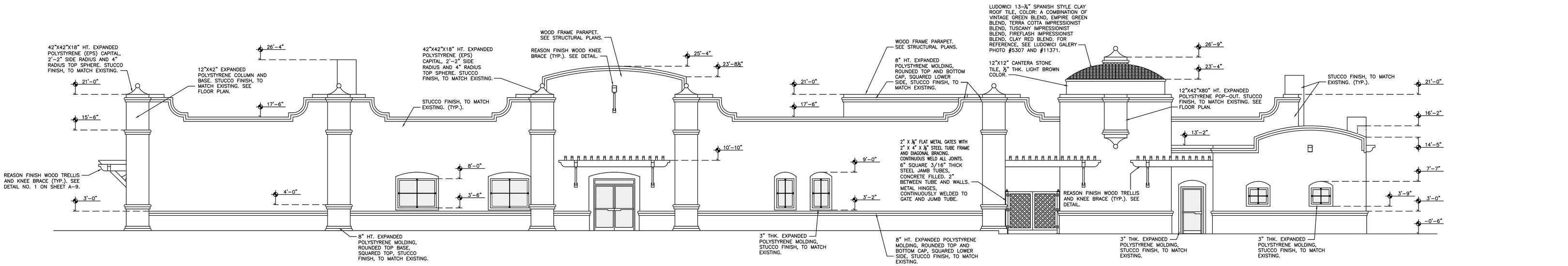

SOUTH ELEVATION
NOT TO SCALE

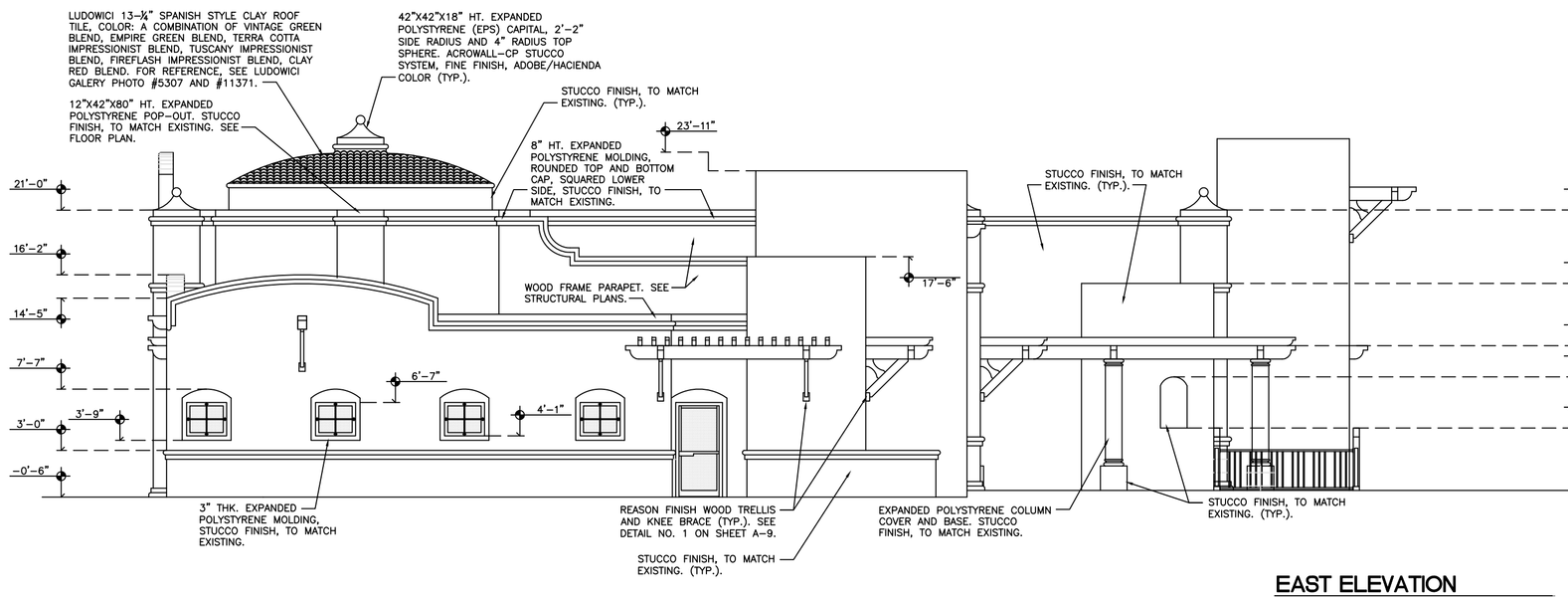

EAST ELEVATION
NOT TO SCALE

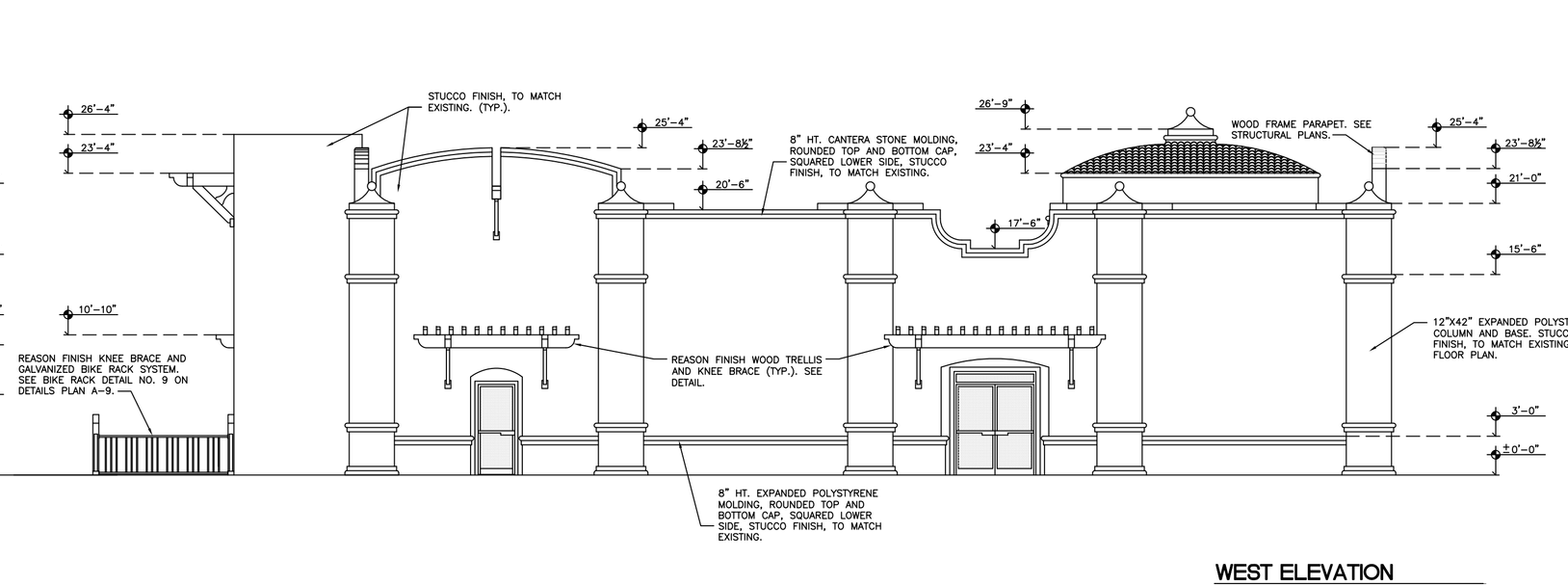

WEST ELEVATION
NOT TO SCALE

ELEVATIONS
SCALE: 1/8" = 1'

SHEET: 7
OF: 27
DWN. BY: A.A.
REV. BY: O.M.
APP. BY: J.G.

LIBRARY EXPANSION PROJECT

ELEVATIONS

IN THE CITY OF IMPERIAL, CALIFORNIA

DATE: 05/14/15

A4

REGISTERED PROFESSIONAL ENGINEER * No. C-74475 * STATE OF CALIFORNIA
SEAL:

BY: ROBERTO C. MARTINEZ
653 W. MAIN ST. SUITE 103
EL CENTRO, CA 92243
DATE: 05/14/15
R.C.E. NO. C-74475

REVISIONS

NO.	DESCRIPTION:	DATE:	BY:
1			
2			
3			

City of Imperial California

CONSTRUCT WOODEN STAIRWAY WITH 2" DIAM. GALVANIZED PIPE/THREADED CONNECTIONS HANDRAIL. CONTRACTOR TO COMPLY WITH PROVISIONS AS PER C.B.C. SECTION 1009 AND 11B-505.

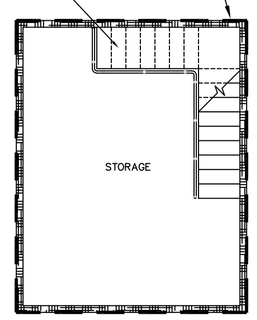

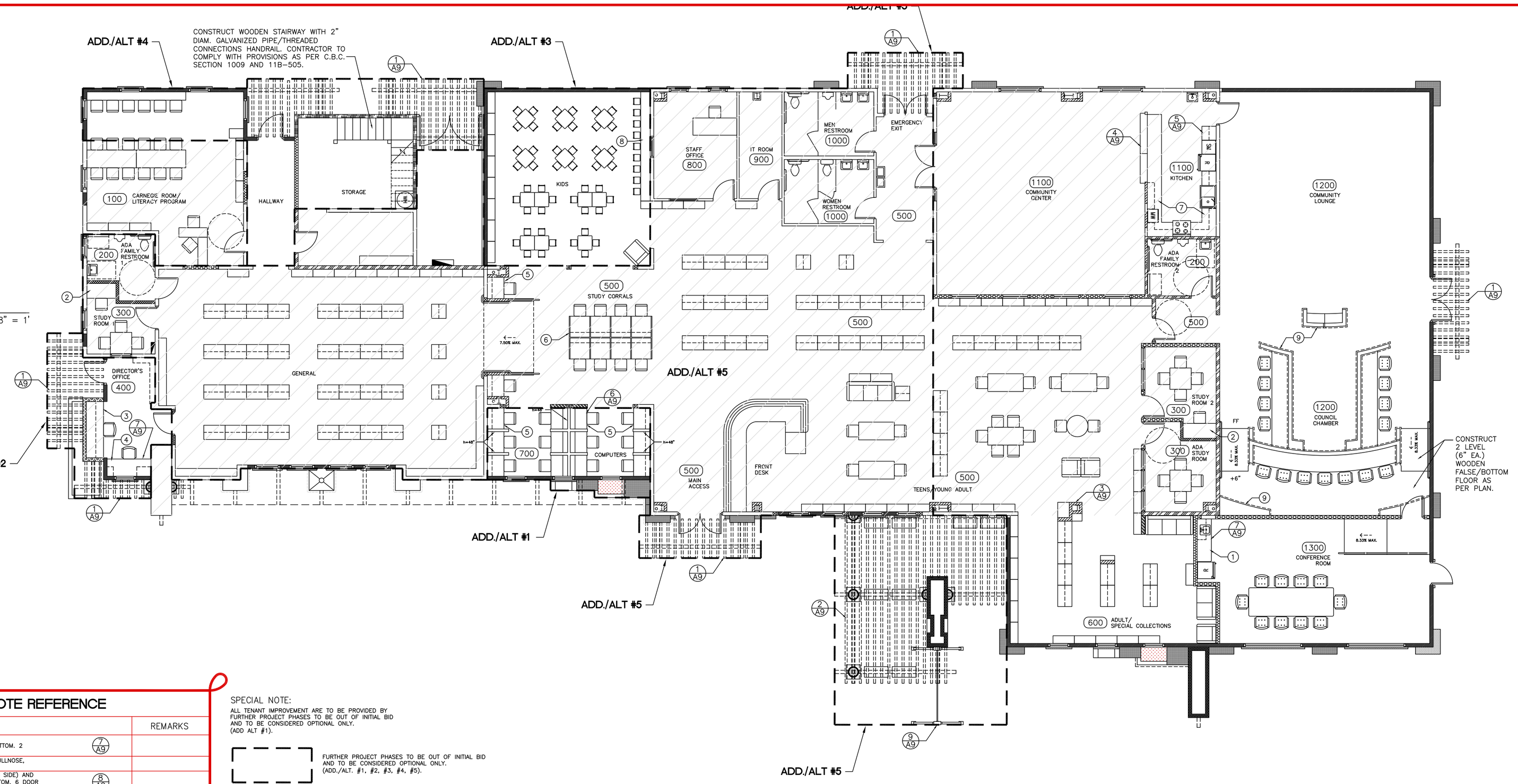

FLOOR PLAN
UPPER LEVEL
SCALE: 1/8" = 1'

○ EQUIPMENT SCHEDULE/KEYNOTE REFERENCE

NO.	DESCRIPTION		REMARKS
1	24" WIDE BUILT IN PLASTIC LAMINATED COUNTER TOP WITH WITH 3 DRAWER LOWER CABINET AND CONVENTIONAL 4" HIGH BACKSPLASH, FULL BULL NOSE, ROUNDED EDGES ON BOTH TOP AND BOTTOM. 2 DOOR 15" WIDE UPPER CABINET.	7/A9	
2	25" WIDE BUILT IN PLASTIC LAMINATED DESK WITH CONVENTIONAL 4" HIGH BACKSPLASH, FULL BULLNOSE, ROUNDED EDGES ON BOTH TOP AND BOTTOM, NO DRAWERS. DIMS. PER PLAN.		
3	29" WIDE BUILT IN PLASTIC LAMINATED DESK WITH 6 DRAWER LOWER CABINET (3 DRAWERS EACH SIDE) AND CONVENTIONAL 4" HIGH BACKSPLASH, FULL BULLNOSE, ROUNDED EDGES ON BOTH TOP AND BOTTOM. 6 DOOR 16" WIDE UPPER CABINET.	8/A9	
4	29" WIDE BUILT IN PLASTIC LAMINATED DESK WITH 3 DRAWER LOWER CABINET AND CONVENTIONAL 4" HIGH BACKSPLASH, FULL BULLNOSE, ROUNDED EDGES ON BOTH TOP AND BOTTOM. 2 DOOR 16" WIDE UPPER CABINET.	8/A9	
5	28" WIDE BUILT IN COMPUTER CORRALS SYSTEM. PLASTIC LAMINATED DESK WITH CONVENTIONAL 4" HIGH BACKSPLASH, FULL BULLNOSE, ROUNDED EDGES ON BOTH TOP AND BOTTOM. 8" WIDE UPPER SHELVE. 4-1/2" THK. 36" WIDE REMOVABLE PARTITION WALLS, NO DRAWERS.	6/A9	
6	33" LONG X 36" WIDE SECTIONS BUILT IN STUDY CORRALS SYSTEM. PLASTIC LAMINATED DESK WITH CONVENTIONAL 4" HIGH BACKSPLASH, FULL BULLNOSE, ROUNDED EDGES ON BOTH TOP AND BOTTOM. 8" WIDE UPPER SHELVE. 1-1/2" THK. WOODEN PARTITION WALLS, NO DRAWERS.		
7	24" WIDE BUILT IN PLASTIC LAMINATED COUNTER TOP WITH WITH 3 DRAWER LOWER CABINETS AND CONVENTIONAL 4" HIGH BACKSPLASH, 16" WIDE HIGH BAR @ 48" HT. (PROVIDE ADA SECTION @ 48" LONG. MIN., 32" HIGH, FULL BULL NOSE, ROUNDED EDGES ON BOTH TOP AND BOTTOM. MULTI DOOR 12" WIDE UPPER CABINETS.	4/A9 5/A9	
8	16" WIDE BUILT IN PLASTIC LAMINATED COUNTER TOP AND CONVENTIONAL 4" HIGH BACKSPLASH, FULL BULL NOSE, ROUNDED EDGES ON BOTH TOP AND BOTTOM.		
9	30" WIDE BUILT IN CAMBRIA BELLINGHAM MARBLE COUNTER TOP COUNCIL CHAMBER CABINET WITH 10" CAPS AND 4" FRONT TRIMS, FULL BULL NOSE, ROUNDED EDGES ON BOTH TOP AND BOTTOM. ALDER WOOD CABINETS AND PODIUM WITH FLUTED WOOD FRONT BOARDS AND 6" THK. PONY WALLS, PODIUM TO BE MOVABLE AND INCLUDE SWIVEL CASTER WHEELS, ESPRESSO STAIN FINISH. BACK PANEL FALSE WOOD WALLS WITH NICHE FOR DOOR AND TV SCREEN INCLUDED.	10/A9	

SPECIAL NOTE:
ALL TENANT IMPROVEMENT ARE TO BE PROVIDED BY FURTHER PROJECT PHASES TO BE OUT OF INITIAL BID AND TO BE CONSIDERED OPTIONAL ONLY. (ADD ALT #1).

FURTHER PROJECT PHASES TO BE OUT OF INITIAL BID AND TO BE CONSIDERED OPTIONAL ONLY. (ADD./ALT. #1, #2, #3, #4, #5).

FLOOR PLAN
LOWER LEVEL
SCALE: 1/8" = 1'

WALL LEGEND

SYMBOL	DESCRIPTION
	NEW 2x6 WOOD FRAMING WALL @ 16" O.C W/5/8" ONE SIDE, R-19 RECYCLED COTTON SOUND PROOF INSULATION. PROVIDE TEXTURE/FINISH AS TO MATCH W/EXISTING WALLS (INTERIOR) AND EXPANDED POLYSTYRENE (EPS) INSULATION + ACROWALL-CP STUCCO SYSTEM, SANTA FE STYLE FINISH (EXTERIOR).
	NEW 2x6 WOOD FRAMING WALL @ 16" O.C W/5/8" DRYWALL ONE SIDE (INTERIOR), R-19 RECYCLED COTTON SOUND PROOF INSULATION AND ACROWALL-CP STUCCO SYSTEM, SANTA FE STYLE FINISH (EXTERIOR)
	EXIST. WOOD FRAMING WALL: REMOVE AND REPLACE ONE SIDE ONLY, PROVIDE 5/8" DRYWALL AND INSTALL R-19 RECYCLED COTTON SOUND PROOF INSULATION + TEXTURE/FINISH TO MATCH W/EXISTING CONTIGUOUS WALLS.
	NEW 2x6 FRAMIMG WALL (PARTITION WALL) @ 16" O.C W/5/8" DRYWALL EACH SIDE. EXTEND WALL 6" BEYOND TOP OF SUSPENDED CEILING HEIGHT. + TEXTURE/FINISH TO MATCH W/EXISTING CONTIGUOUS WALLS.
	NEW 2x6 WOOD FRAMIMG WALL (PARTITION WALL) @ 16" O.C W/5/8" DRYWALL EACH SIDE, R-19 RECYCLED COTTON SOUND PROOF INSULATION. EXTEND WALL 6" BEYOND TOP OF SUSPENDED CEILING HEIGHT.
	2x6 WOOD FRAMING WALL @ 16" O.C W/ 15/32" PLYWOOD SHEATHING + ACROWALL-CP STUCCO SYSTEM, SANTA FE STYLE FINISH AT ONE SIDE ONLY (EXTERIOR).
	NEW 4-1/2" THK. 36" WIDE WOODEN REMOVABLE PARTITION WALL TO BE A PART OF CUSTOM COMPUTER CORRAL SYSTEM.
	NEW 2x4 WOOD FRAMING WALL (PARTITION WALL) @ 16" O.C W/5/8" DRYWALL EA. EXTEND 6" BEYOND TOP OF SUSPENDED CEILING HEIGHT, TEXTURE/FINISH TO MATCH W/EXISTING CONTIGUOUS WALLS.
	3" EXPANDED POLYSTYRENE (EPS) INSULATION.
	EXISTING WOOD WALL TO REMAIN.
	EXISTING CONSTRUCTION

LEGEND

SYMBOL	DESCRIPTION	SYMBOL	DESCRIPTION
	BOOK SHELVE ISLAND		WOODEN CUSTOM STUDY CORRALS
	STD. BOOK SHELVE		
	84"X30" TABLE		CUSTOM COMPUTER CORRALS
	36"X36" TABLE		
	144"X48" TABLE (CONFERENCE ROOM)		CUSTOM DESK AND WALL SHELVE
	KIDS TABLE		UPPER/LOWER CABINET SYSTEM
	FILE CABINET	R	REFRIGERATOR
	FILE CABINET	MW	MICROWAVE OVEN
	STD. CHAIR	SM	SODA MACHINE
	OFFICE CHAIR		
	EXECUTIVE CHAIR		
	STOVE		

FINISH SCHEDULE

NO.	ROOM	CEILING HEIGHT	WALL PAINT TYPE	REMARKS
100	CARNEGIE ROOM / LITERACY PROGRAM	EXIST.	SPACKLED AND PRIME PAINTED W/LOW VOC PRIMER. HIGH PERFORMANCE EGGSHELL FRAZEE PAINT WALL COVERING. COLOR: JONESBORO CLC1219W. EUROTILE COMMERCIAL CARPET TILE, MODEL #707102, COLOR: WINDSOR TERRACE AGATE, DIMS. 19.7"X19.7" OR APPROVED EQUAL.	(EXIST. CEILING TO REMAIN AT CARNEGIE ROOM. 8'-3" HT.).
200	ADA FAMILY RESTROOM	9'-0"	SPACKLED AND PRIME PAINTED W/LOW VOC PRIMER. HIGH PERFORMANCE EGGSHELL FRAZEE PAINT WALL COVERING. COLOR: JONESBORO CLC1219W. DALTILE CERAMIC FLOOR TILE QUARRY, 6"X6" C.T., MOD. 0080, 6"X6", 3/8" MIN. SELF COVED BASE, MOD. P-3665, COLOR: WHEAT PAVER, OR APPROVED EQUAL.	DALTILE QUARRY, 6"X6", 3/8" MIN. SELF COVED BASE, MOD. P-3665, WHEAT PAVER. (EXIST. CEILING TO REMAIN AT ADA FAMILY R.R. 1. 8'-4" HT.).
300	STUDY ROOM 1 AND 2, ADA STUDY ROOM	9'-0"	SPACKLED AND PRIME PAINTED W/LOW VOC PRIMER. HIGH PERFORMANCE EGGSHELL FRAZEE PAINT WALL COVERING. COLOR: JONESBORO CLC1219W. EUROTILE COMMERCIAL CARPET TILE, MODEL #707102, COLOR: WINDSOR TERRACE AGATE, DIMS. 19.7"X19.7" OR APPROVED EQUAL.	(EXIST. CEILING TO REMAIN AT STUDY ROOM 1. 8'-4" HT.).
400	DIRECTOR'S OFFICE	8'-0"	SPACKLED AND PRIME PAINTED W/LOW VOC PRIMER. HIGH PERFORMANCE EGGSHELL FRAZEE PAINT WALL COVERING. COLOR: MORETI CLC1214M. EUROTILE COMMERCIAL CARPET TILE, MODEL #707102, COLOR: WINDSOR TERRACE AGATE, DIMS. 19.7"X19.7" OR APPROVED EQUAL.	
500	HALLWAYS, GENERAL, KIDS, STUDY CORRALS, MAIN ACCESS, FRONT DESK, TEENS/YOUNG ADULT	EXIST.	SPACKLED AND PRIME PAINTED W/LOW VOC PRIMER. HIGH PERFORMANCE EGGSHELL FRAZEE PAINT WALL COVERING. COLOR: JONESBORO CLC1219W. EUROTILE COMMERCIAL CARPET TILE, MODEL #707102, COLOR: WINDSOR TERRACE AGATE, DIMS. 19.7"X19.7" OR APPROVED EQUAL.	PAINT FOR KIDS AREA SOUTH, EAST AND WEST WALLS SHALL BE HIGH PERFORMANCE EGGSHELL FRAZEE PAINT WALL COVERING COLOR: JUBILEE CLV1116N.
600	ADULT/SPECIAL COLLECTIONS	10'-0"	SPACKLED AND PRIME PAINTED W/LOW VOC PRIMER. HIGH PERFORMANCE EGGSHELL FRAZEE PAINT WALL COVERING. COLOR: MORETI CLC1214M. TRAFFICMASTER HANDSCRAPED LAMINATED 7MM THK. FLOORING, MODEL #34089, COLOR: SARATOGA HICKORY, DIMS.7-9/32"X50-3/8" OR APPROVED EQUAL.	
700	COMPUTERS	9'-0"	SPACKLED AND PRIME PAINTED W/LOW VOC PRIMER. HIGH PERFORMANCE EGGSHELL FRAZEE PAINT WALL COVERING. COLOR: JUBILEE CLV1116N. EUROTILE COMMERCIAL CARPET TILE, MODEL #707102, COLOR: WINDSOR TERRACE AGATE, DIMS. 19.7"X19.7" OR APPROVED EQUAL.	

NO.	ROOM	CEILING HEIGHT	WALL PAINT TYPE	REMARKS
800	STAFF OFFICE	EXIST.	SPACKLED AND PRIME PAINTED W/LOW VOC PRIMER. HIGH PERFORMANCE EGGSHELL FRAZEE PAINT WALL COVERING. COLOR: JONESBORO CLC1219W. EUROTILE COMMERCIAL CARPET TILE, MODEL #707102, COLOR: WINDSOR TERRACE AGATE, DIMS. 19.7"X19.7" OR APPROVED EQUAL.	
900	I.T. ROOM	EXIST.	SPACKLED AND PRIME PAINTED W/LOW VOC PRIMER. HIGH PERFORMANCE EGGSHELL FRAZEE PAINT WALL COVERING. COLOR: JONESBORO CLC1219W. EUROTILE COMMERCIAL CARPET TILE, MODEL #707102, COLOR: WINDSOR TERRACE AGATE, DIMS. 19.7"X19.7" OR APPROVED EQUAL.	
1000	MEN'S, WOMEN'S RESTROOMS	EXIST.	SPACKLED AND PRIME PAINTED W/LOW VOC PRIMER. HIGH PERFORMANCE EGGSHELL FRAZEE PAINT WALL COVERING. COLOR: JONESBORO CLC1219W. EUROTILE COMMERCIAL CARPET TILE, MODEL #707102, COLOR: WINDSOR TERRACE AGATE, DIMS. 19.7"X19.7" OR APPROVED EQUAL.	
1100	COMMUNITY CENTER/KITCHEN	EXIST.	SPACKLED AND PRIME PAINTED W/LOW VOC PRIMER. HIGH PERFORMANCE EGGSHELL FRAZEE PAINT WALL COVERING. COLOR: JONESBORO CLC1219W. EUROTILE COMMERCIAL CARPET TILE, MODEL #707102, COLOR: WINDSOR TERRACE AGATE, DIMS. 19.7"X19.7" OR APPROVED EQUAL. (DALTILE CERAMIC FLOOR TILE SYS. KITCHEN ONLY)	DALTILE CERAMIC FLOOR TILE QUARRY, 6"X6" C.T., MOD. 0080, 6"X6", 3/8" MIN. SELF COVED BASE MOD. P-3665, COLOR: WHEAT PAVER, OR APPROVED EQUAL.
1200	COMMUNITY LOUNGE, COUNCIL CHAMBER	10'-0"	SPACKLED AND PRIME PAINTED W/LOW VOC PRIMER. HIGH PERFORMANCE EGGSHELL FRAZEE PAINT WALL COVERING. COLOR: JONESBORO CLC1219W. EUROTILE COMMERCIAL CARPET TILE, MODEL #707102, COLOR: WINDSOR TERRACE AGATE, DIMS. 19.7"X19.7" OR APPROVED EQUAL.	
1300	CONFERENCE ROOM	10'-0"	SPACKLED AND PRIME PAINTED W/LOW VOC PRIMER. HIGH PERFORMANCE EGGSHELL FRAZEE PAINT WALL COVERING. COLOR: MORETI CLC1214M. EUROTILE COMMERCIAL CARPET TILE, MODEL #707102, COLOR: WINDSOR TERRACE AGATE, DIMS. 19.7"X19.7" OR APPROVED EQUAL.	

REVISIONS

NO.	DESCRIPTION:	DATE:	BY:
1			
2			
3			

SHEET: 8
OF: 27
DWN. BY: A.A.
REV. BY: O.M.
APP. BY: J.G.

LIBRARY EXPANSION PROJECT
FLOOR PLAN
IN THE CITY OF IMPERIAL, CALIFORNIA
DATE: 10/09/15

A5

SEAL: REGISTERED PROFESSIONAL ENGINEER ROBERTO C. MARTINEZ No. C-74475 STATE OF CALIFORNIA

BY: ROBERTO C. MARTINEZ
653 W. MAIN ST. SUITE 103
EL CENTRO, CA 92243
DATE: 05/14/15
R.C.E. NO. C-74475

City of Imperial California

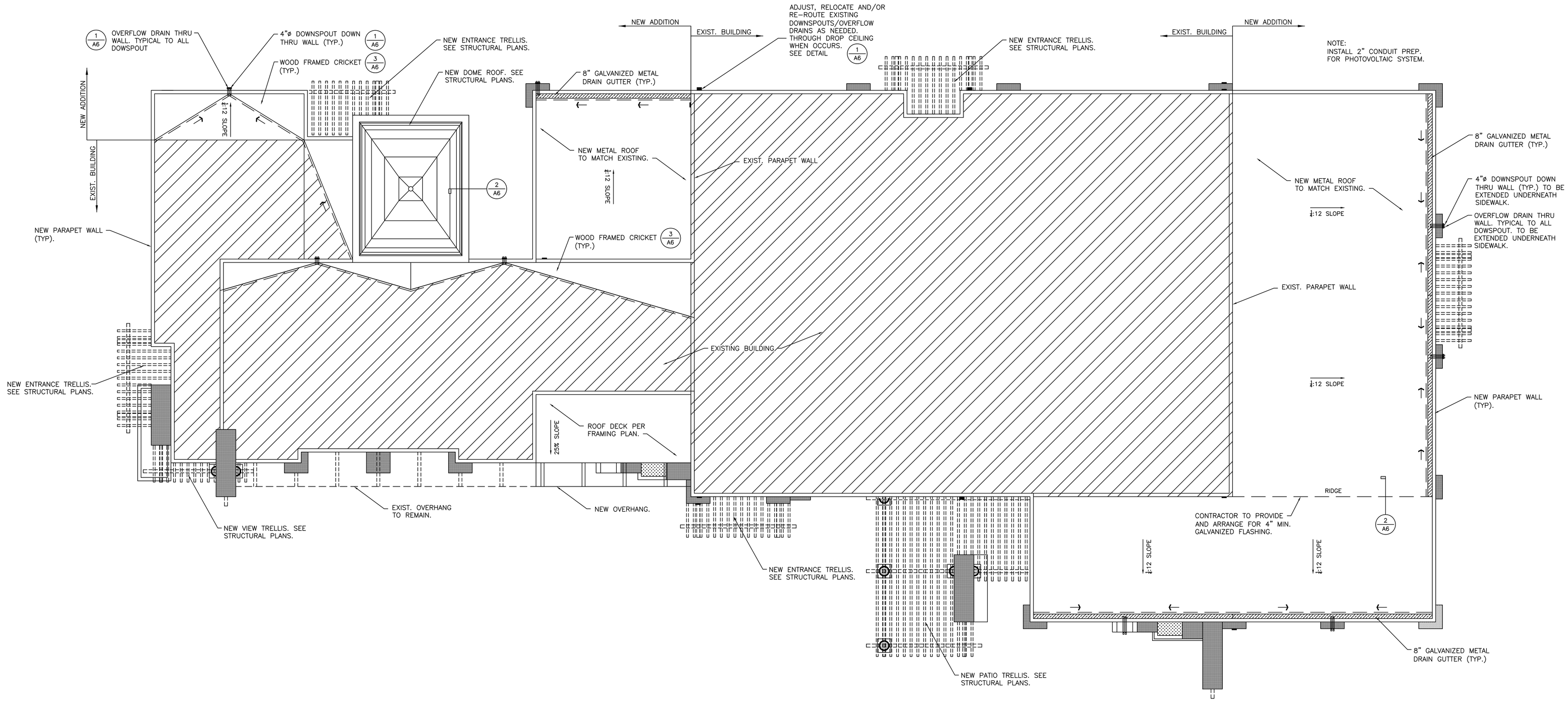

ROOF PLAN

SCALE: 1/8" = 1'

WALL LEGEND

SYMBOL	DESCRIPTION
	EXISTING ROOF TO REMAIN.
	EXPANDED POLYSTYRENE/INDEPENDENT WOOD FRAMING ELEMENTS.
	EXISTING PARAPET WALL TO REMAIN
	NEW PARAPET WALL
— —	ROOF RIDGE LINE
→	FLOW DIRECTION
▬	EXIST. DOWNSPOUT/OVERFLOW DRAIN
▬	PROPOSED NEW DOWNSPOUT/OVERFLOW DRAIN

ROOF DRAIN AND RAINWATER/PIPING CALCS.

4" MAX. RAINFALL PER HOUR (MAX.)
NEW ADDITION ROOF AREA = 4,846 SQ.FT.
4,874 S.F. / 6 DRAINS = 812.3 S.F. / PER DRAIN
4"ø PVC DRAIN WILL PROVIDE = 3,460 S.F. ALLOWABLE AREA

DOWNSPOUT/OVERFLOW NOZZLE INFORMATION

WATTS BRAND, MODEL RD-944 DOWNSPOUT NOZZLE, COW TONGUE TYPE CAST NICKEL BRONZE. INLET: 4" PIPE SIZE IPS THREADED CONNECTION. (OR APPROVED EQUAL). CONTRACTOR TO PROVIDE SPECIFIED NOZZLE AT EACH DOWNSPOUT AND OVERFLOW OUTLETS AS PER MANUFACTURER'S RECOMMENDATIONS PRIOR CITY OF IMPERIAL'S STAFF APPROVAL.

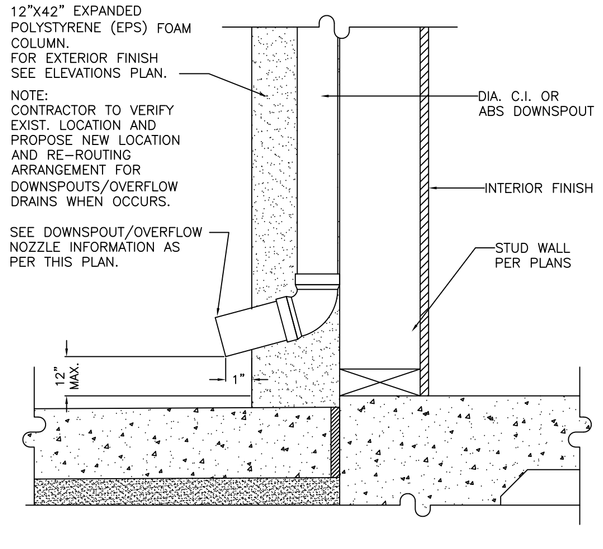

DOWNSPOUT OUTLET AND OVERFLOW DRAIN DETAIL ①
N.T.S.

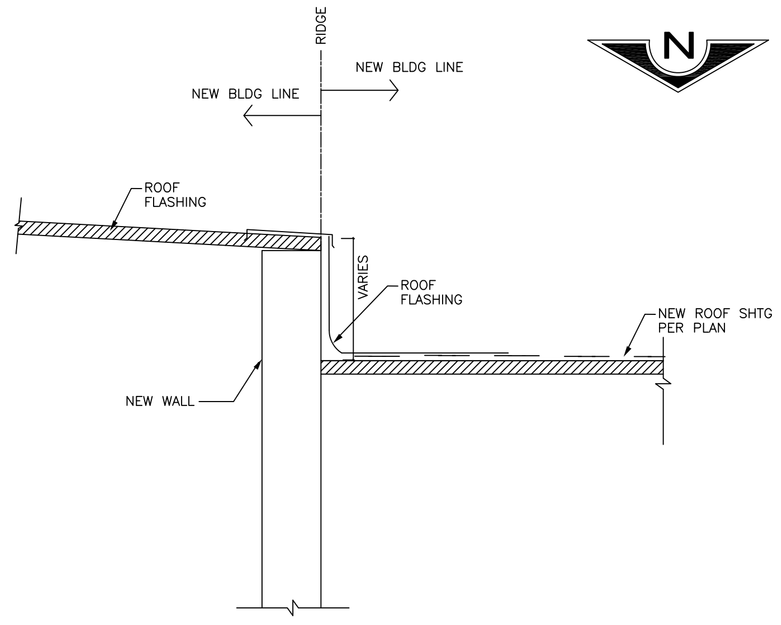

ROOF FLASHING DETAIL ②
N.T.S.

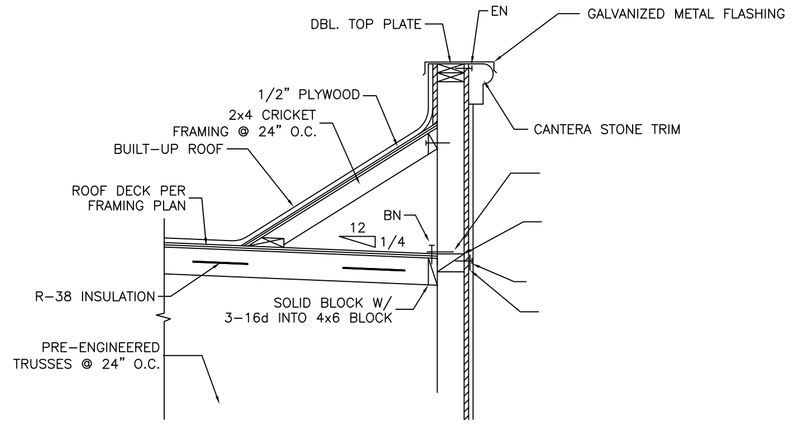

CRICKET/ROOF CONECTION DETAIL ③
N.T.S.

SHEET: 9 OF: 27
DWN. BY: A.A.
REV. BY: O.M.
APP. BY: J.G.

LIBRARY EXPANSION PROJECT
ROOF PLAN
IN THE CITY OF IMPERIAL, CALIFORNIA
DATE: 10/19/15

A6

SEAL:

BY: ROBERTO C. MARTINEZ
653 W. MAIN ST. SUITE 103
EL CENTRO, CA 92243
DATE: 05/14/15
R.C.E. NO. C-74475

REVISIONS

NO.	DESCRIPTION:	DATE:	BY:
1			
2			
3			

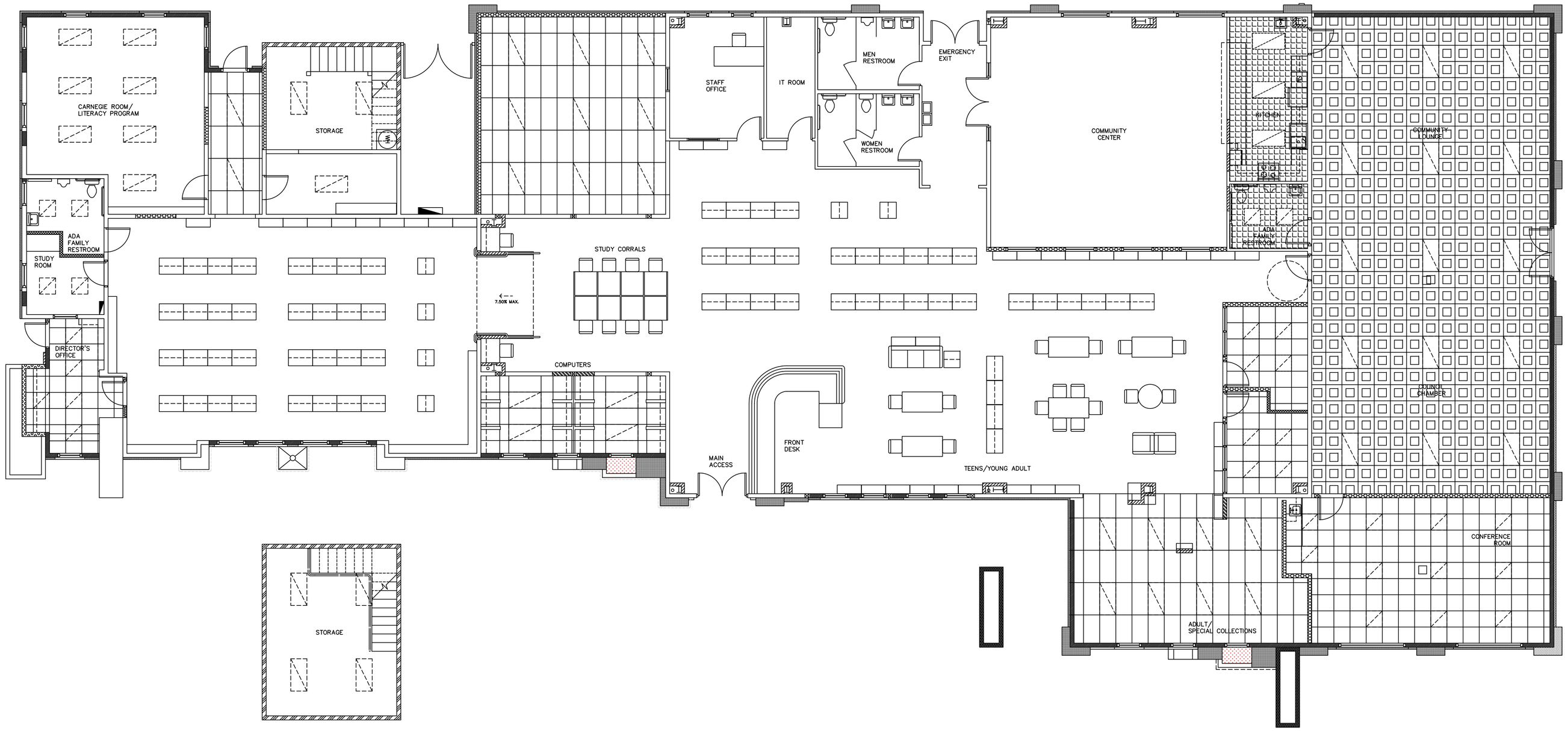

REFLECTIVE CEILING PLAN
UPPER LEVEL

SCALE: 1/8" = 1'

REFLECTIVE CEILING PLAN
LOWER LEVEL

SCALE: 1/8" = 1'

SUSPENDED CEILING LEGEND

SYMBOL	DESCRIPTION
	SUSPENDED CEILING GRID TO BE ARMSTRONG "PRELUDE XL" 9/16" EXPOSED TEE-2'x2' GRID. CEILING TILES TO BE ARMSTRONG "SHALLOW COFFER WHITE" #128BXA ANGLED TEGULAR 2'X2'X5/8"TILES.
	SUSPENDED CEILING GRID TO BE ARMSTRONG "PRELUDE XL" 9/16" EXPOSED TEE-2'x2' GRID. CEILING TILES TO BE ARMSTRONG "DUNE-FINE TEXTURE" #1774 ANGLED TEGULAR 2'X2'X5/8"TILES.
	SUSPENDED CEILING GRID TO BE ARMSTRONG "PRELUDE XL" 9/16" EXPOSED TEE-2'x4' GRID. CEILING TILES TO BE ARMSTRONG "DUNE-FINE TEXTURE" #1776 ANGLED TEGULAR 2'X4'X5/8"TILES.
	NEW GYPSUM BOARD CEILING.
	PROPOSED LIGHT FIXTURE LOCATION. (REFER TO E1 ELECTRICAL PLAN).

FIXTURES NOTES:

LIGHTING FIXTURES, EGRESS LIGHTING, SPEAKERS, AIR TERMINALS OR MECHANICAL SERVICES WEIGHING UP TO 56 POUNDS AND DIRECTLY SUPPORTED BY THE CEILING GRID SYSTEM SHALL BE POSITIVELY ATTACHED TO THE CEILING SYSTEM. ATTACHMENT SHALL BE MADE WITH A MINIMUM OF 4 APPROVED FASTENERS LOCATED WITHIN 3 INCHES OF THE GRID INTERSECTIONS TO SUSPENSION MAIN RUNNERS, OR TO CROSS RUNNERS WITH THE SAME CARRYING CAPACITY AS THE MAIN RUNNERS.
IN ADDITION TO THE ABOVE GRID CONNECTION FIXTURES WEIGHING 20 POUNDS BUT NOT MORE THAN 56 POUNDS, SHALL HAVE TWO 0.080 INCH (12 GAUGE A.W.G.) HANGERS CONNECTED FROM THE FIXTURE TO THE CEILING SYSTEM HANGERS OR TO THE STRUCTURE ABOVE. THESE WIRES MAY BE SLACK.
FIXTURES WEIGHING LESS THAN 20 POUNDS DO NOT REQUIRE SLACK WIRES.
FIXTURES WEIGHING MORE THAN 56 POUNDS SHALL BE SUPPORTED INDEPENDENTLY FROM THE GRID SYSTEM DIRECTLY FROM THE STRUCTURE ABOVE BY APPROVED HANGERS.

SUSPENDED CEILING NOTES:

1.– SUSP. CEILING SHALL COMPLY W/C.B.C. TABLE 25–A AND 16–O
2.– ALL CEILING SHALL USE A HEAVY DUTY T–BAR GRID SYSTEM–ARMSTRONG PRELUDE XL 15/16" (WHITE FINISH).
3.– THE WIDTH OF THE PERIMETER SUPPORTING CLOSURE ANGLE SHALL NOT BE LESS THAN 2 INCHES
4.– IN EACH ORTHOGONAL HORIZONTAL DIRECTION, ONE END OF THE CEILING GRID SHALL BE ATTACHED TO THE CLOSURE ANGLE.
5.– THE OTHER END IN EACH HORIZONTAL DIRECTION SHALL HAVE A 3/4" CLEARANCE FROM THE WALL AND SHALL REST UPON AND BE FREE TO SLIDE ON A CLOSURE ANGLE OR A LISTED ASSEMBLY.
6.– CEILINGS WITHOUT RIDGE BRACING MUST HAVE 2" OVERSIZE TRIM RINGS FOR SPRINKLERS AND OTHER CEILING PENETRATIONS.
7.– SUSPENDED DROP CEILING W/MINERAL ACOUSTIC TEXTURIZED PANELS, (PANEL SIZE AS SPECIFIED ON FINISH SCHEDULE).
8.– ALL CEILINGS SHALL BE FLAT PLANE IN EACH ROOM.
9.– SUSPENDED CEILING PANELS SHALL HAVE RECYCLED CONTENT.
10.– REFER TO LIGHTING PLANS FOR LIGHTING FIXTURES LOCATION AND SPECS.
11.– PROVIDE 3 1/2" SOUND BATT INSULATION FOR ALL SUSPENDED DROP CEILING, THIS ALSO BE PROVIDED WITHIN 8'–0" OF ALL EXISTING OR NEW MECHANICAL UNITS LOCATED WITHIN THE PLENUM SPACE OR ON THE ROOF ABOVE WHERE OCCURS.

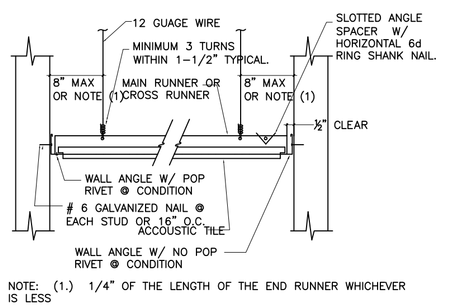

NOTE: (1.) 1/4" OF THE LENGTH OF THE END RUNNER WHICHEVER IS LESS

MAIN RUNNER AT WALL ①
N.T.S.

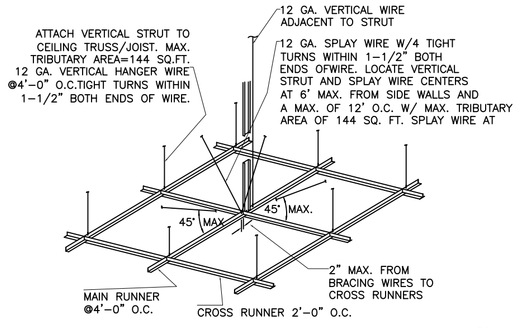

TYPICAL GRID DETAIL ②
N.T.S.

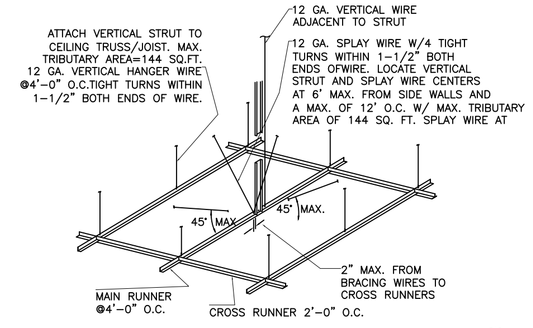

TYPICAL GRID DETAIL ③
N.T.S.

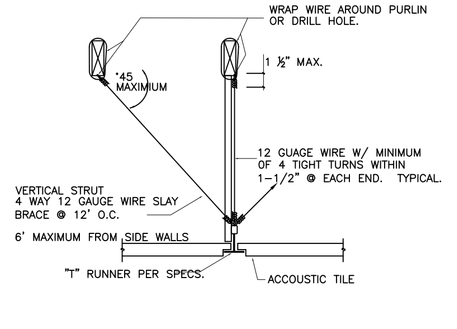

TYPICAL T BAR ④
N.T.S.

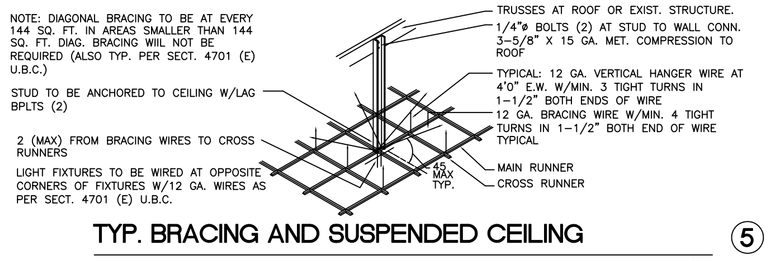

TYP. BRACING AND SUSPENDED CEILING ⑤
N.T.S.

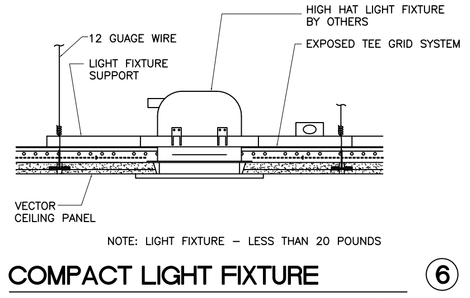

NOTE: LIGHT FIXTURE – LESS THAN 20 POUNDS

COMPACT LIGHT FIXTURE ⑥
N.T.S.

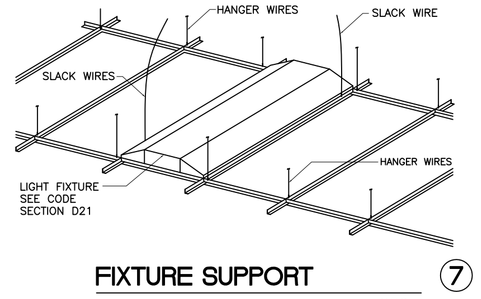

FIXTURE SUPPORT ⑦
N.T.S.

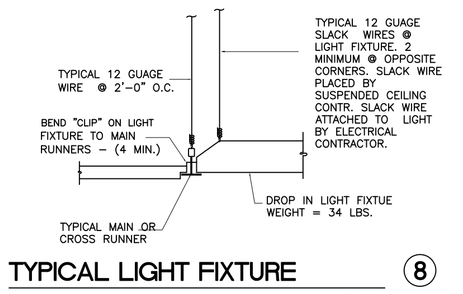

TYPICAL LIGHT FIXTURE ⑧
N.T.S.

REVISIONS

NO.	DESCRIPTION:	DATE:	BY:
◁			
◁			
◁			

BY: ROBERTO C. MARTINEZ
653 W. MAIN ST. SUITE 103
EL CENTRO, CA 92243
DATE: 05/14/15
R.C.E. NO. C–74475

SEAL: REGISTERED PROFESSIONAL ENGINEER ROBERTO C. MARTINEZ No. C-74475 STATE OF CALIFORNIA

A7

LIBRARY EXPANSION PROJECT
REFLECTIVE CEILING PLAN
IN THE CITY OF IMPERIAL, CALIFORNIA
DATE: 10/09/15

SHEET: 10
OF: 27
DWN. BY: A.A.
REV. BY: O.M.
APP. BY: J.G.

City of Imperial California

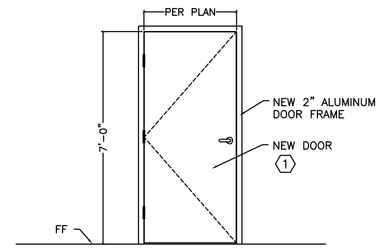

INTERIOR DOOR DETAIL (1)
N.T.S.

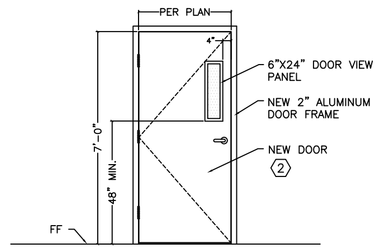

INTERIOR DOOR DETAIL (2)
N.T.S.

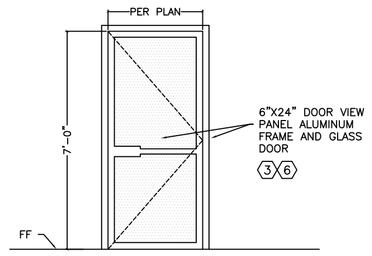

EXTERIOR DOOR DETAIL (3)
N.T.S.

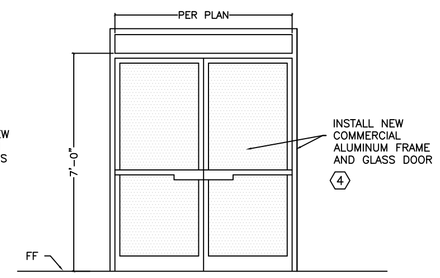

EXTERIOR DOOR DETAIL (4)
N.T.S.

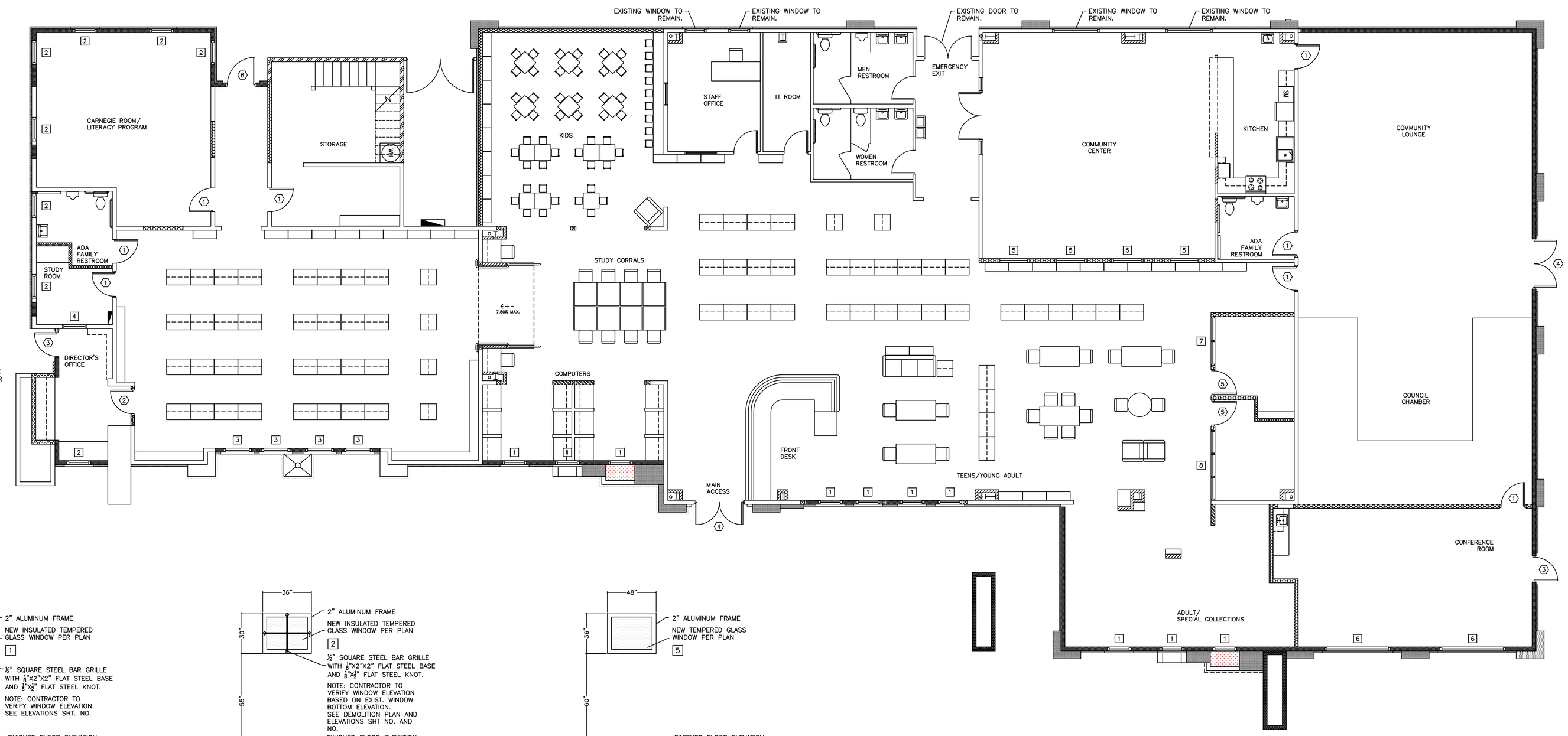

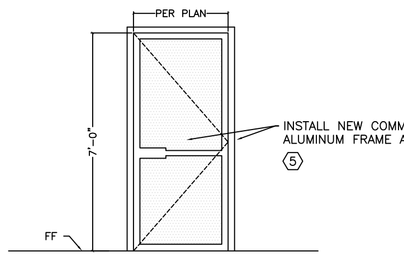

INTERIOR DOOR DETAIL (5)
N.T.S.

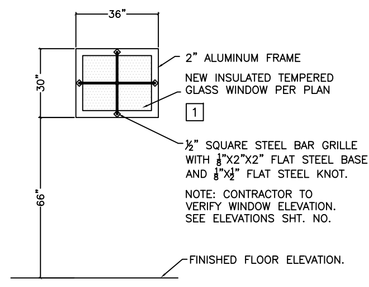

EXTERIOR WINDOW DETAIL (6)
N.T.S.

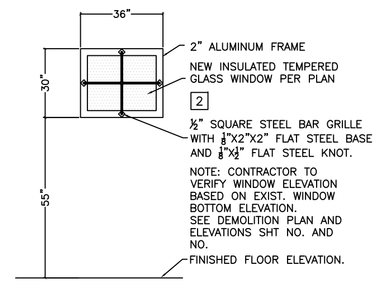

EXTERIOR WINDOW DETAIL (7)
N.T.S.

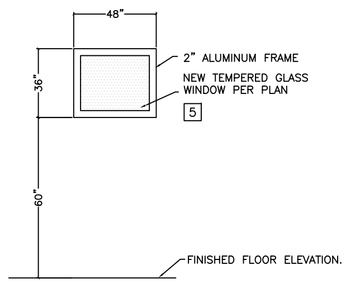

INTERIOR WINDOW DETAIL (8)
N.T.S.

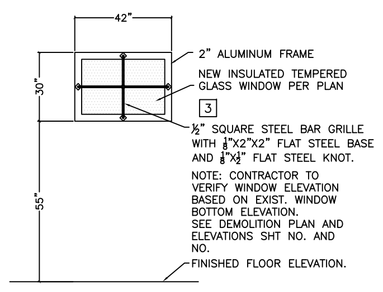

EXTERIOR WINDOW DETAIL (9)
N.T.S.

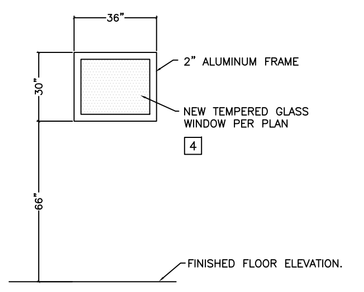

INTERIOR WINDOW DETAIL (10)
N.T.S.

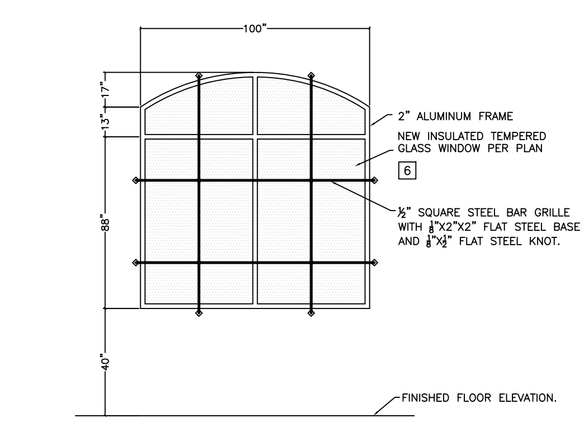

EXTERIOR WINDOW DETAIL (11)
N.T.S.

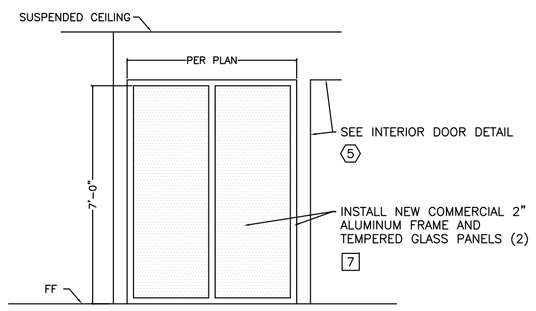

INTERIOR WINDOW PANEL DETAIL (12)
N.T.S.

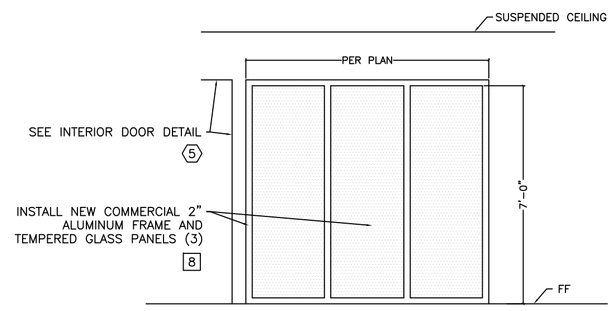

INTERIOR WINDOW PANEL DETAIL (13)
N.T.S.

DOORS AND WINDOWS PLAN

SCALE: 1/8" = 1'

FENESTRATION PERFORMANCE RATINGS

WINDOWS (40% MAXIMUM AREA)			
TYPE	MAXIMUM U-FACTOR	MAXIMUM RSHGC	MINIMUM VT
FIXED	0.36	0.25	0.42
DOORS	0.45	0.23	0.17

DOOR SCHEDULE NOTES

1.- EXIT DOOR TO HAVE SIGN STATING "THIS DOOR TO REMAIN UNLOCKED WHEN BUILDING IS OCCUPIED" AS PER C.B.C. SECTION 1008.1.9.3-2-2.2
2.- EXIT DOORS SHOULD BE OPENABLE FROM INSIDE W/O USE OF A KEY, SPECIAL KNOWLEDGE OR EFFORT
3.- LEVER TYPE HARDWARE TO BE MOUNTED 30" TO 44" ABOVE FLOOR AND OPERABLE W/ MAX. EFFORT OF 8.5 lbs. AT EXTERIOR AND 5lbs. AT INTERIOR, SUCH EFFORT SHALL BE APPLIED AT RIGHT ANGLES TO HINGED DOORS AND AT CENTER PLANE FORSLIDING DOORS, 15lbs. SHALL BE INCREASED AT ALL FIRE RATED DOORS
4.- ALL DOORS SHALL HAVE SMOOTH PLANE SURFACE AT LOWER 10"
5.- SEE ADA ACCESS NOTES FOR DOOR SPECS.
6.- ALL DOORS SHALL BE 20 MIN. FIRE RATED W/ SELF CLOSER.
7.- 6"X24" SAFETY GLASS VIEW PANEL WINDOW AS PART OF DOOR SYSTEM (VERTICAL, 4" OFFSET E.W. FROM HANDLE SIDE ALWAYS).
8.- PUSH-PULL HARDWARE W/O LOCKING DEVICE.
9.- ALL EMERGENCY EXIT DOORS HARDWARE AND LOCKS SHALL BE INSTALLED FOR INSIDE OPENING ONLY.
10.- ALL PUBLIC DOOR SHALL BE EQUIPED W/KICK PLATES.
11.- ALL EXTERIOR DOORS SHALL BE WEATHER-TIGHT.
12.- ALL EXTERIOR DOORS SHALL OPEN OUTWARD OTHERWISE INDICATED ON THE FLOOR PLAN.
13.- INACCESSABLE HINGE PINS OR NON-RISING FIXED-HINGE PINS SHALL BE PROVIDED OR INSTALLED IN A MANNER TO PREVENT DOOR REMOVAL WHEN IT IS CLOSED AND LOCKED.
14.- ALL DOOR LOCK SHALL BE KEY LOCKOUT ONLY.
15.- ALL INTERIOR DOOR SHALL MEET WITH REQUIREMENTS OF BEING A FLUSH, SOLID CORE 1-¾" THICK WHEN WOOD DOORS ARE SPECIFIED.
16.- DOORS FOR EGRESS ONLY SHALL NOT HAVE ANY OPERABLE EXTERIOR HARDWARE.
17.- ALL SECURITY LOCKING-ARRANGEMENTS ON DOORS USED FOR EGRESS SHALL COMPLY WITH REQUIREMENTS OF NFPA 101.
18.- ALL DOORS SHALL HAVE CORRESPONDING SILENCERS AND DOORSTOPS (WALL OR FLOOR MOUNTED).
19.- CONTRACTOR TO PROVIDE SPECIFICATIONS/SUBMITTALS AND SAMPLES FOR DOORS, WINDOWS AND FRAMES BEFORE INSTALLATION FOR REVIEW AND APPROVAL BY THE CITY OF IMPERIAL.

⬡ DOOR SCHEDULE

NO.	SIZE	QTY.	MATERIAL	FINISH	FRAME MATERIAL	FRAME FINISH	LOCK SYSTEM	REMARKS
1	36"X84"	8	NEW SOLID CORE WOOD	NAT. WOOD VENEER	ANODIZED ALUMINUM	PRE-FINISH	LEVER-TYPE STANDARD COMMERCIAL DUTY DOOR HANDLES, SINLGE CYLINDER KEYLOCK W/PUSH-BUTTON. SIMPLEX BRAND OR APPROVED EQUAL.	SMOOTH SURFACE. SEE NOTES: 15 AND 18 COLOR: WALNUT OR APPROVED EQUAL FOR WOOD VENEER, BRONZE FOR ALUMINUM FRAME. (1/A7)
2	36"X84"	1	NEW SOLID CORE WOOD	NAT. WOOD VENEER	ANODIZED ALUMINUM	PRE-FINISH	LEVER-TYPE STANDARD COMMERCIAL DUTY DOOR HANDLES, SINLGE CYLINDER KEYLOCK W/PUSH-BUTTON. SIMPLEX BRAND OR APPROVED EQUAL.	SELF CLOSING, 6"X24" DOOR VIEW PANEL. SEE NOTES: 7, 8, 10, 13 AND 18. COLOR: WALNUT OR APPROVED EQUAL FOR WOOD VENEER, BRONZE FOR ALUMINUM FRAME. (2/A7)
3	36"X84"	2	NEW INSULATED TEMPERED GLASS /ALUMINUM	PRE-FINISH	ANODIZED ALUMINUM	PRE-FINISH	STANDARD COMMERCIAL DUTY DOOR HANDLES. STANDARD COMMERCIAL TYPE METAL HINGES AND TRACKS. COMBINATION - PUSH BUTTON ELECTRONIC CIPHER LOCK W/KEY OVERRIDE AND KEY LOCKOUT. SIMPLEX BRAND OR APPROVED EQUAL.	SELF CLOSING AND PANIC HARDWARE. SEE NOTES: 8, 10, 13, 17 AND 18. COLOR: BRONZE (3/A7)
4	36"X84"	1	NEW INSULATED TEMPERED GLASS /ALUMINUM	PRE-FINISH	ANODIZED ALUMINUM	PRE-FINISH	STANDARD COMMERCIAL DUTY DOOR HANDLES. SINGLE CYLINDER KEYLOCK. STANDARD COMMERCIAL TYPE METAL HINGES AND TRACKS. PANIC HARDWARE W/LOCKING DEVICE. SARGENT BRAND OR APPROVED EQUAL.	SELF CLOSING, TWO (2) PANEL DOOR WITH UPPER PANEL. INSTALL NEW ADA PUSH BUTTON OPENNING SYSTEM; TO REMAIN/ADJUST IF EXISTING. COLOR: BRONZE (4/A7)
5	36"X84"	2	NEW TEMPERED GLASS /ALUMINUM	PRE-FINISH	ANODIZED ALUMINUM	PRE-FINISH	STANDARD COMMERCIAL DUTY DOOR HANDLES. STANDARD COMMERCIAL TYPE METAL HINGES AND TRACKS. SARGENT BRAND OR APPROVED EQUAL.	SELF CLOSING, COLOR: BRONZE (5/A7)
6	42"X84"	1	NEW INSULATED TEMPERED GLASS /ALUMINUM	PRE-FINISH	ANODIZED ALUMINUM	PRE-FINISH	STANDARD COMMERCIAL DUTY DOOR HANDLES. STANDARD COMMERCIAL TYPE METAL HINGES AND TRACKS. COMBINATION - PUSH BUTTON ELECTRONIC CIPHER LOCK W/KEY OVERRIDE AND KEY LOCKOUT. SIMPLEX BRAND OR APPROVED EQUAL.	SELF CLOSING AND PANIC HARDWARE. SEE NOTES: 8, 10, 13, 17 AND 18. COLOR: BRONZE (3/A7)

☐ WINDOW SCHEDULE

NO.	SIZE	QTY.	MATERIAL	REMARKS
1	30"X36"	10	NEW INSULATED TEMPERED GLASS WINDOW W/2" ALUMINUM FRAME.	COLOR: BRONZE (6/A7)
2	30"X36"	8	NEW INSULATED TEMPERED GLASS WINDOW W/2" ALUMINUM FRAME.	COLOR: BRONZE (7/A7)
3	30"X42"	4	NEW INSULATED TEMPERED GLASS WINDOW W/2" ALUMINUM FRAME.	COLOR: BRONZE (8/A7)
4	30"X36"	1	NEW TEMPERED GLASS WINDOW W/2" ALUMINUM FRAME.	COLOR: BRONZE (9/A7)
5	36"X48"	4	NEW TEMPERED GLASS WINDOW W/2" ALUMINUM FRAME.	COLOR: BRONZE (10/A7)
6	AS PER PLAN/DET.	2	NEW INSULATED TEMPERED GLASS WINDOW W/2" ALUMINUM FRAME.	COLOR: BRONZE (11/A7)
7	AS PER PLAN/DET.	1	NEW INSULATED TEMPERED GLASS WINDOW W/2" ALUMINUM FRAME.	COLOR: BRONZE (12/A7)
8	AS PER PLAN/DET.	1	NEW INSULATED TEMPERED GLASS WINDOW W/2" ALUMINUM FRAME.	COLOR: BRONZE (13/A7)

SHEET: 11
OF: 27
DWN. BY: A.A.
REV. BY: O.M.
APP. BY: J.G.

LIBRARY EXPANSION PROJECT

DOORS + WINDOWS PLAN

IN THE CITY OF IMPERIAL, CALIFORNIA

DATE: 10/09/15

A8

SEAL: REGISTERED PROFESSIONAL ENGINEER * ROBERTO C. MARTINEZ * No. C-74475 * STATE OF CALIFORNIA

BY: ROBERTO C. MARTINEZ
653 W. MAIN ST. SUITE 103
EL CENTRO, CA 92243
DATE: 05/14/15
R.C.E. NO. C-74475

REVISIONS

NO.	DESCRIPTION:	DATE:	BY:
1			
2			
3			

City of Imperial California

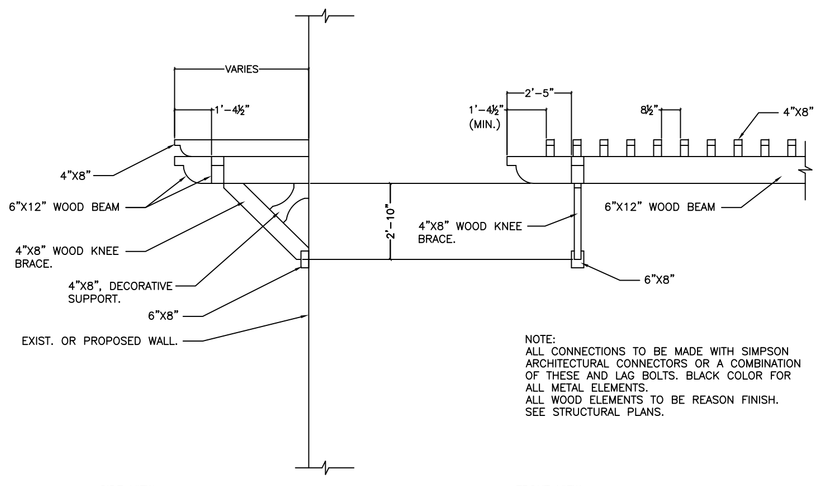

WOOD TRELLIS/KENEE BRACE DETAIL ①

N.T.S.

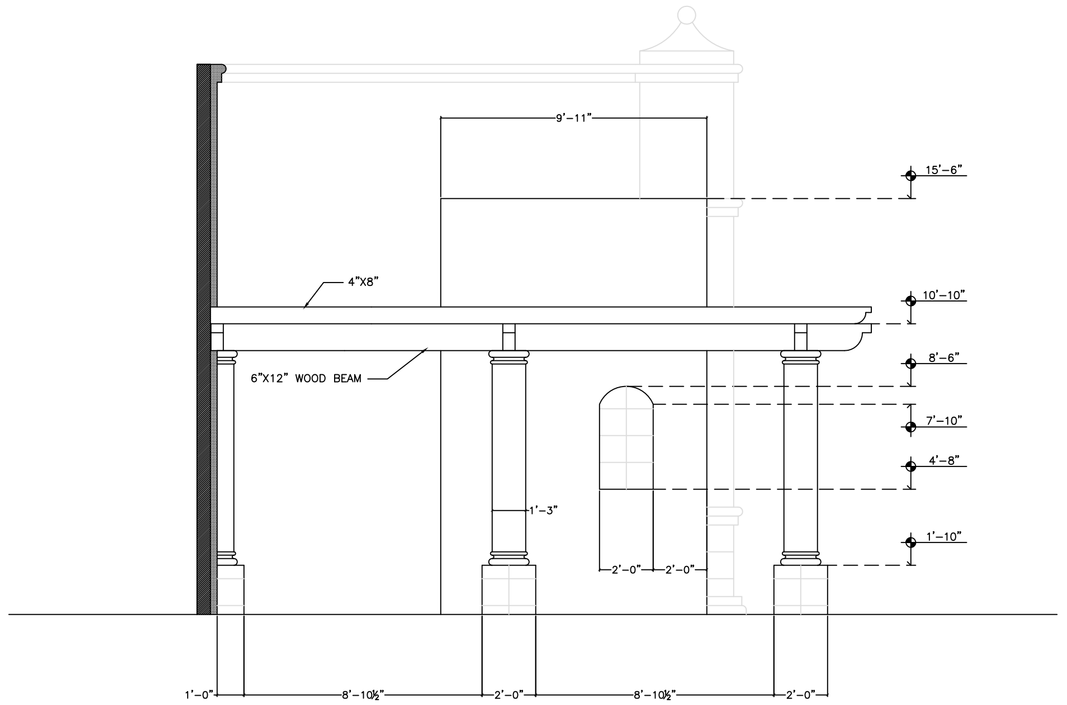

PATIO/WOOD TRELLIS DETAIL ②

N.T.S.

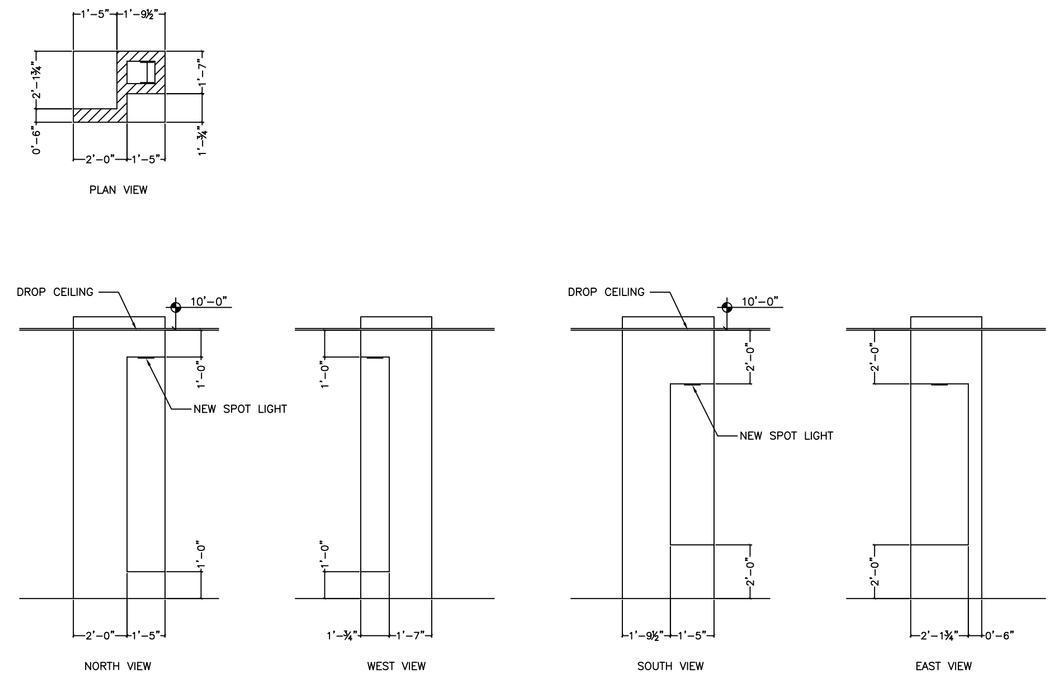

RESSESED COLUMN DETAIL ③

N.T.S.

REVISION CLOUD NO. 2
09/04/15

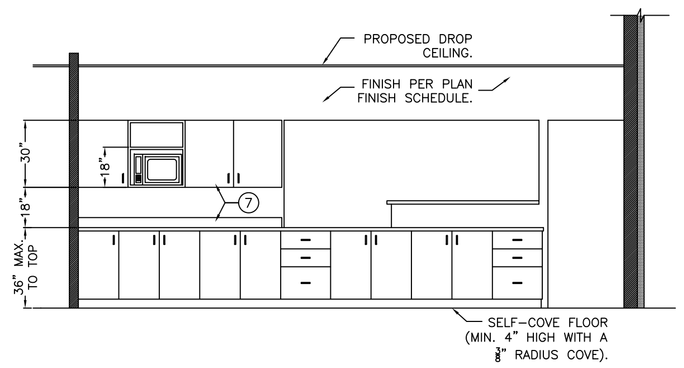

KITCHEN CABINET SYS. DETAIL ④

N.T.S.

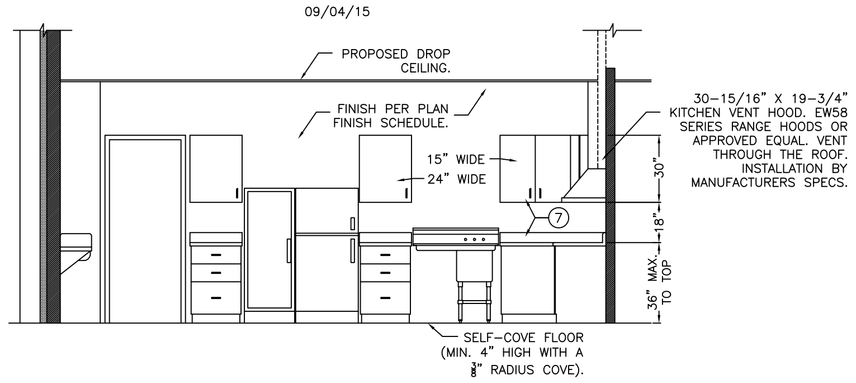

KITCHEN CABINET SYS. DETAIL ⑤

N.T.S.

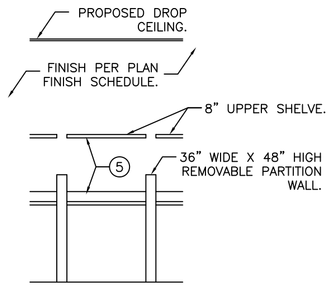

COMPUTER CORRAL MODULE DETAIL ⑥

N.T.S.

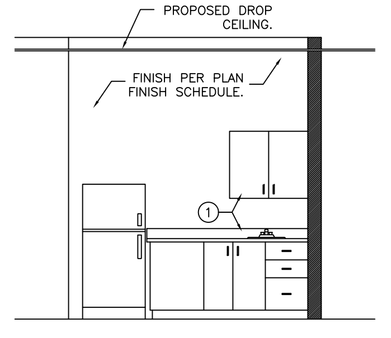

CONFERENCE ROOM CABINET DETAIL ⑦

N.T.S.

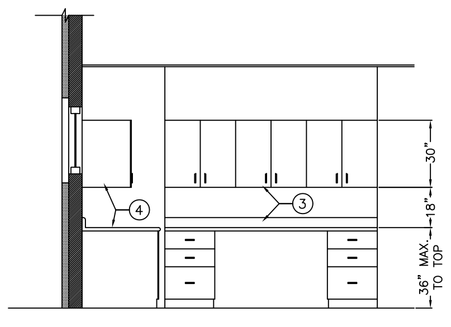

DIRECTOR'S OFFICE CABINET DETAIL ⑧

N.T.S.

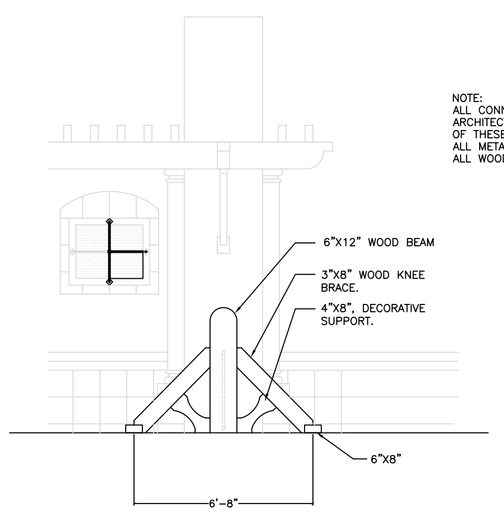

NORTH VIEW

NOTE:
ALL CONNECTIONS TO BE MADE WITH SIMPSON ARCHITECTURAL CONNECTORS OR A COMBINATION OF THESE AND LAG BOLTS. BLACK COLOR FOR ALL METAL ELEMENTS.
ALL WOOD ELEMENTS TO BE REASON FINISH.

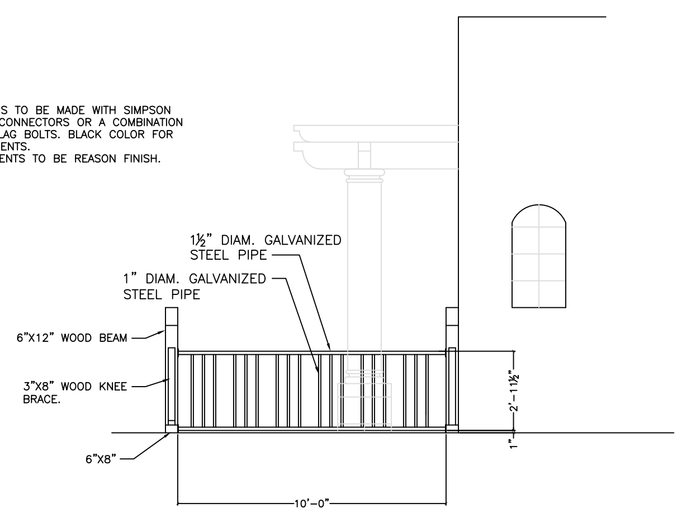

WEST VIEW

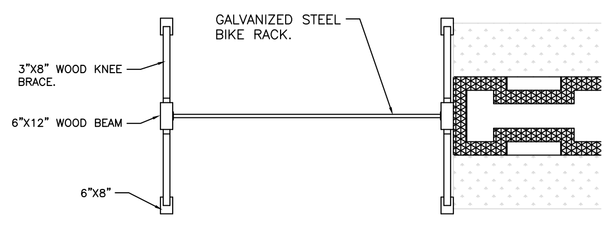

PLAN VIEW

BIKE RACK DETAIL ⑨

N.T.S.

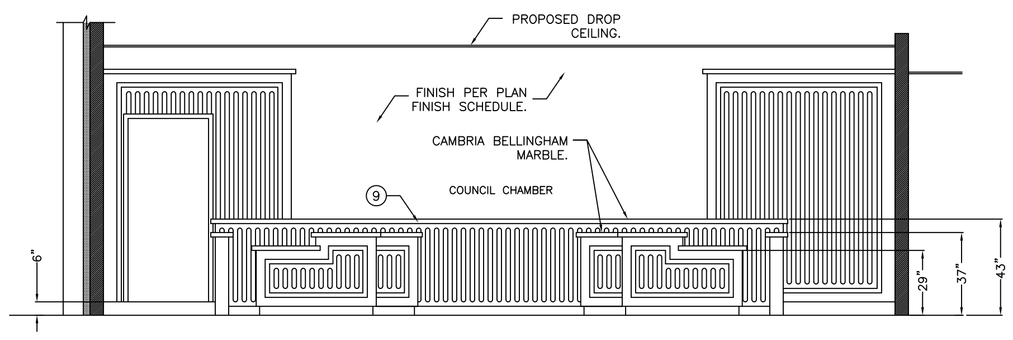

NORTH VIEW

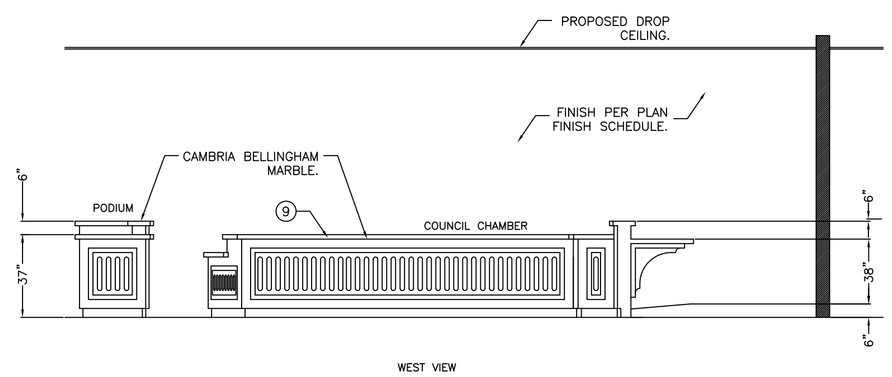

WEST VIEW

CITY COUNCIL CHAMBER CABINETS ⑩

N.T.S.

SHEET: 12
OF: 27
DWN. BY: A.A.
REV. BY: O.M.
APP. BY: J.G.

LIBRARY EXPANSION PROJECT

DETAILS

IN THE CITY OF IMPERIAL, CALIFORNIA

DATE: 10/09/15

A9

SEAL:

BY: ROBERTO C. MARTINEZ
653 W. MAIN ST. SUITE 103
EL CENTRO, CA 92243
DATE: 05/14/15
R.C.E. NO. C-74475

REVISIONS

NO.	DESCRIPTION:	DATE:	BY:
1			
2			
3			

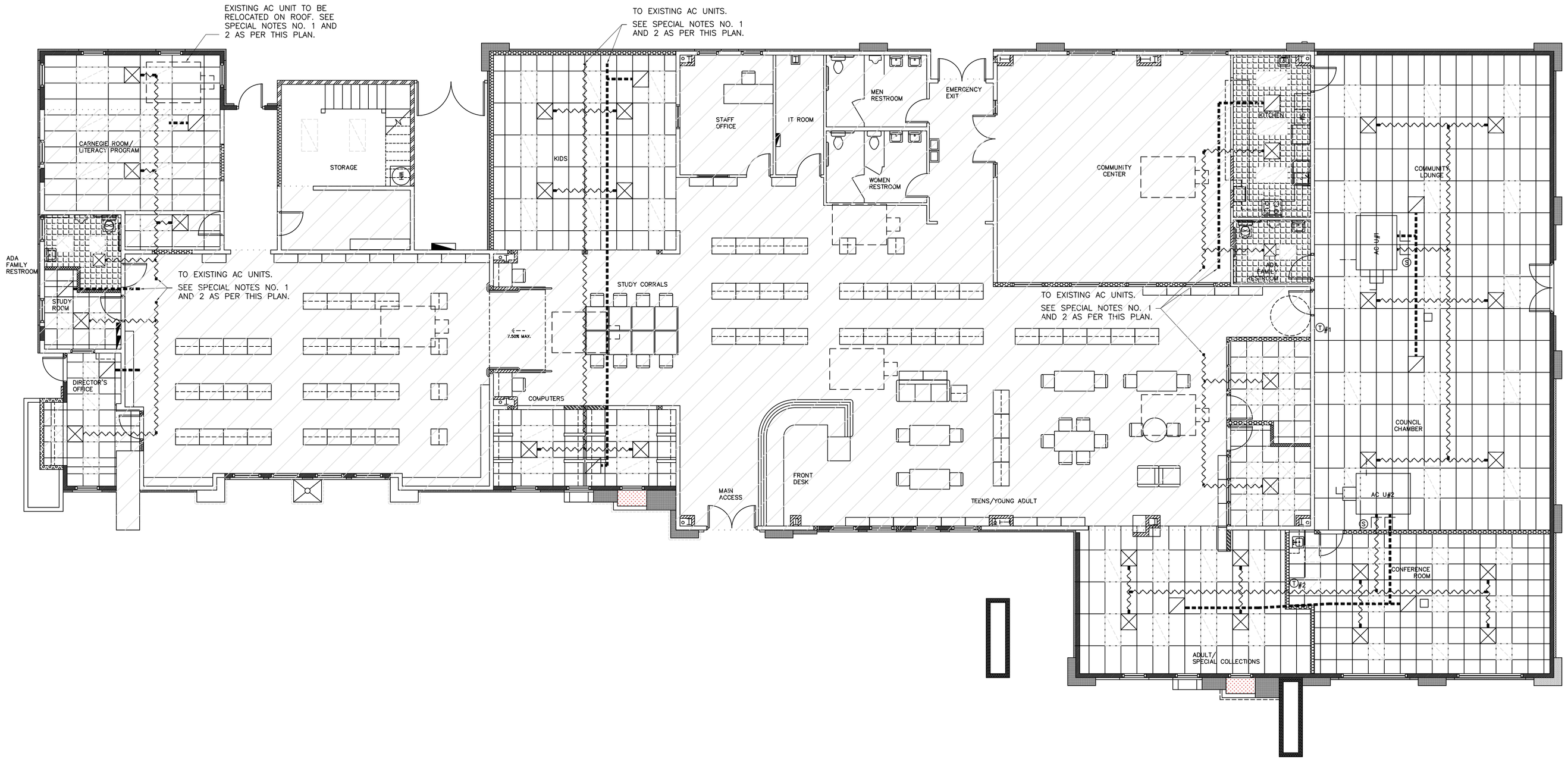

N

MECHANICAL PLAN

SCALE: 1/8" = 1'

MECHANICAL NOTES

1.– ALL WORK TO BE DONE ACCORDING WITH CALIFORNIA ELECTRICAL CODE 2013 EDITION.

2.– A FLAME SPREAD INDEX OF NOT MORE THAN 25 AND A SMOKE DEVELOPEMENT RATING OF NOT MORE THAN 50 FOR MARERIALS EXPOSED WITHIN THE DUCTS OR PLENUMS.

3.– A FLAME SPREAD OF NOT MORE THAN 25 AND A SMOKE DEVELOPMENT RATING OF NOT MORE THAN 50 FOR INSULATION TO BE APPLIED TO THE EXTERIOR SURFACE OF DUCTS WITHIN THE BUILDING.

4.– PROVIDE 120 OUTLET WITHIN 25' OF HVAC EQUIPTMENT. UMC SEC. 509

5.– SPECIFY ALL EQUIPTMENT SHALL BE LISTED AND LABELED BY AN APPROVED TESTING AGENCY, i.e. U.L.

6.– ALL EXHAUST FAN ROOF TERMINATIONS TO BE CLEAR OF ANY RATED SETBACK AREAS.

7.– FACTORY CONSTRUCTED CLASS 1 AIR DUCTS OF A R–6 INSULATING RATING SHALL BE APPROVED. DUCT STRAPPED EVERY 4' OR LESS PER CODE. ALL DUCT CONNECTIONS TO BE TAPED ON LINER OR VAPOR BARRIER, SECURED WITH DRAW BAND (PANDUIT) STRAPS.

8.– ALL DUCT OPENINGS SHALL BE SEALED AGAINST ELEMENTS AND PROTECTED. ALL EQUIPMENT TO BE SEALED AND PROTECTED AS WELL PER CALIFORNIA GREEN REQUIREMENTS.

9.– ALL DUCT SIZING IN ACCORDANCE WITH ASHRAE STANDARDS AND GUIDELINES.

10.– ALL TESTING AND BALANCING TO BE BY 3RD. PARTY (HERS RATER) AND SHALL FOLLOW GUIDELINES SET FORTH BY CALIFORNIA GREEN CODE 5.410.4 AND 5.410.2. ALL RESULTS TO BE GIVEN TO THE CITY OF IMPERIAL REPRESENTATIVE AT TIME OF COMPLETION AND START UP.

11.– ALL PERFORMANCE MANUALS AND SPEC. SHEETS TO BE SUBMITTED TO THE CITY OF IMPERIAL AT TIME OF START UP AND COMPLETE WALK–THRU OF ALL EQUIPMENT OPERATIONS AND REQUIREMENTS.

MATERIAL FOR DUCTS:

12.– RECTANGULAR DUCTS: 26 GA. SHEET MEATL (GALVANIZED) WITH FSK 1 1/2" w/.75 POUNDS DENSITY AND COVER WITH ALUMINUM JACKET.

13.– FLEXIBLE ROUND DUCTS: 2 PLY POLYESTER CORE AND BLACK POLYETHY JACKETS w/R.8 FIBERGLASS INSULATION

14.– PENETRATIONS OF FIRE RESIST. WALLS, AND ROOF–CEILING SHALL BE PROTECTED AS REQUIRED IN 2010 CBC.

15.– SMOKE DETECTORS SHALL BE PROVIDED IN SUPPLY AIR DUCT OF "AIR–MOVING SYSTEM" FOR REQUIRED SHUT–OFF SMOKE CONTROL AS PER 2013 CBC – FOR EACH UNIT

SPECIAL NOTES

1.– CONTRACTOR TO VERIFY EXISTING AC UNIT LOCATIONS, PROPOSE NEW DUCT ARRANGEMENTS AND PROVIDE CALCULATIONS TO FIT WITH REDEFINED AREAS AS PER THIS PLAN/SET OF PLANS.

2.– CONTRACTOR TO INSTALL GRILLS AS SHOWN ON PLAN. CONNECT DUCT SYSTEM TO THE NEAREST AND/OR MORE SUITABLE EXISTING AC UNIT AS PER HIS CALCULATIONS/RECOMMENDATIONS.

3.– CONTRACTOR TO READ AND REVIEW DAY & NIGHT HEATING AND COOLING PRODUCTS RHH PRODUCT SPECIFICATIONS FOR HIGH EFFICIENCY PACKAGE HEAT PUMPS R–410A SINGLE PACKAGE ROOFTOP FOR SPECIFIED AC UNIT.

MECHANICAL LEGEND

SYMBOL	DESCRIPTION	SYMBOL	DESCRIPTION
AC U#	A.C. PACKAGE UNIT, ROOF MOUNTED		SUPPLY AIR FLEXIBLE DUCT
			RETURN AIR DUCT
	EXISTING A.C. PACKAGE UNIT		3/4" PVC CONDENSATE DRAIN
		EF	EXHAUST FAN TYPE AND INFORMATION PER ELECTRICAL PLAN.
	24"X24" SUPPLY AIR GRILL		FIRE DAMPER NOTE: FIRE DAMPERS TO BE PROVIDED AT SHAFT FOR SUPPLY AND RETURN DUCTS.
	12"X12" RETURN AIR GRILL	T #2	THERMOSTAT/UNIT
	24"X24" RETURN AIR GRILL	S	SMOKE DETECTOR NOTE: TO BE PROVIDED AT MAIN SUPPLY AIR DUCT.

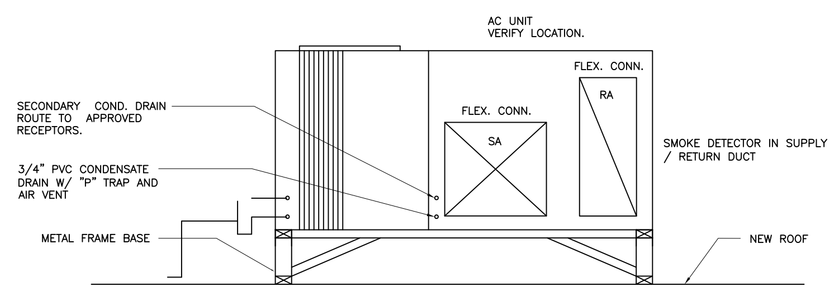

AC MOUNTING DETAIL (1)

N.T.S.

A/C UNIT INFORMATION

UNIT	MAKE	MODEL	DESCRIPTION	CAPACITY	VOLTS/PHASE/HZ	MINIMUM BRANCH CIRCUIT	MAXIMUM BRANCH CIRCUIT	BRANCH CIRCUIT CONDUCTOR SIZING:	COOLING NET. CAP. (BTUH)	COOLING SEER	COOLING EER	HEATING HIGH CAP. (BTUH)	HEATING HSPF	HEATING COP
A/C #1	DAY & NIGHT	RHH060*0XA0AAA	ROOF MOUNTED UNIT	5 TON.	208–230/3/60	30.2	45	3–#8, 1–#10 GROUND	5 TON.	15.0	12.5	55,000	8.2	N/A
A/C #2	DAY & NIGHT	RHH060*0XA0AAA	ROOF MOUNTED UNIT	5 TON.	208–230/3/60	30.2	45	3–#8, 1–#10 GROUND	5 TON.	15.0	12.5	55,000	8.2	N/A
						SEER 15 COOL ONLY								

LEGEND

SYMBOL	DESCRIPTION
	EXISING BUILDING
	NEW ADDITION/EXIST. BUILDING LIMIT

SHEET: 13
OF: 27
DWN. BY: A.A.
REV. BY: O.M.
APP. BY: J.G.

LIBRARY EXPANSION PROJECT

MECHANICAL PLAN

IN THE CITY OF IMPERIAL, CALIFORNIA

DATE: 10/09/15

M1

REGISTERED PROFESSIONAL ENGINEER * ROBERTO C. MARTINEZ * No. C-74475 * STATE OF CALIFORNIA

SEAL:

BY: ROBERTO C. MARTINEZ
653 W. MAIN ST. SUITE 103
EL CENTRO, CA 92243
DATE: 05/14/15
R.C.E. NO. C–74475

REVISIONS

NO.	DESCRIPTION:	DATE:	BY:
1			
2			
3			

City of Imperial California

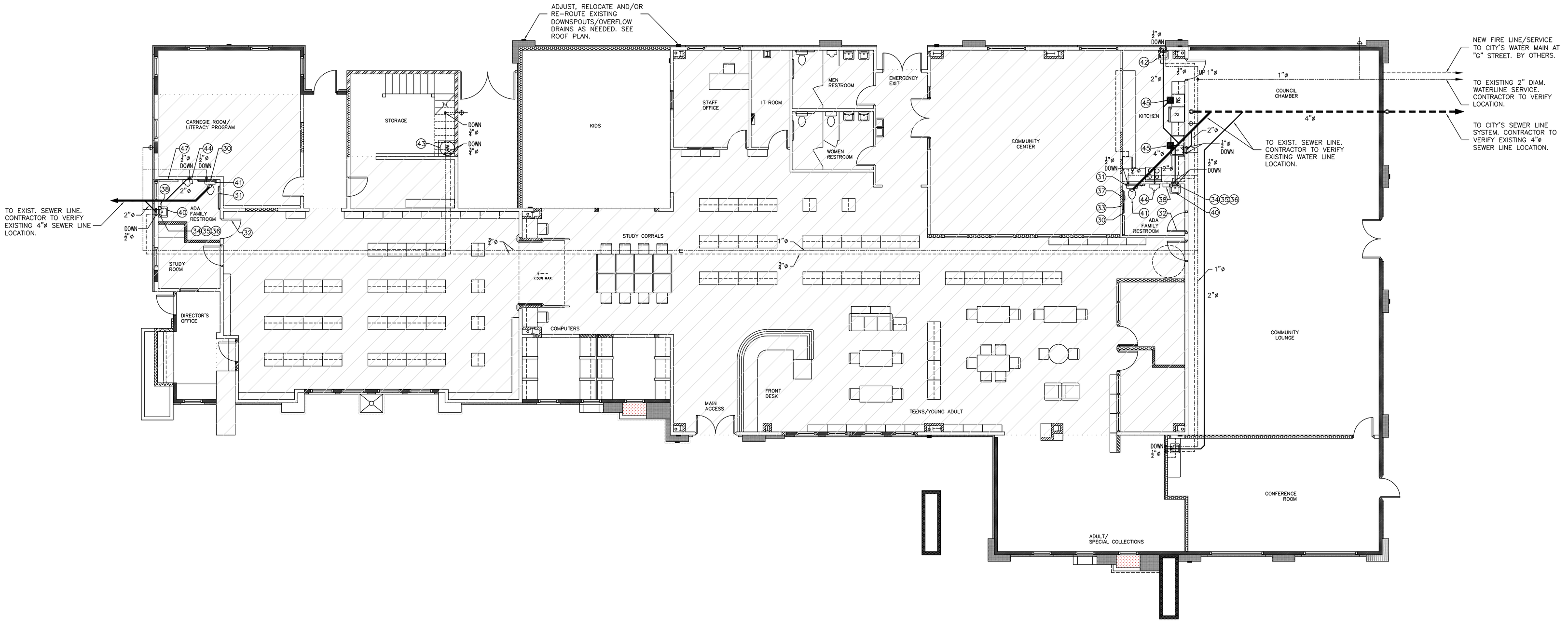

N

PLUMBING PLAN

SCALE: 1/8" = 1'

PLUMBING NOTES:

1. All equipment to be inst. per manufacture recomendations & local codes.
2. Use copper pipe for water lines.
3. Use A.B.S. sch.40 pipe for sewer.
4. 4" sewer required for (4) w/c toilets.
5. All new meter closet and associated flusho-meter valves. if any, shall use no more than 1.6 gals. per flush.
6. 50 gallons electrical water heater to be wrapped with R-16 value insulation.
7. Water heater to be anchored or strapped to wall, WH. strap @ top 1/3 & bottom 1/3
8. All work shall be done in accordance with these plans and shall be performed with latest industry accepted practices.
9. Plumbing contractor shall furnish all equipment, material, labor, etc., whether shown on these plans or not, necessary to provide a complete, workable, code-approved plumbing system.
10. All lavatories and sinks shall come complete with necessary trim, 'p' traps, tailpiece connections, and required carriers.
11. Provide necessary carriers for all water closets, urinals, and all other plumbing equipment which require them.
12. All hot water lines shall be insulated with 1/2" Armaflex or equal.
13. Plumbing contractor to coordinate all lines and vents with mechanical equipment.
14. Where water and sewer pipes are run in the same trench: a.The bottom of the water pipe at all points shall be at least twelve (12") above the top of the sewer. b.The water pipe shall be placed on a solid shelf excavated at one side of the common trench.
15. All condensate lines shall be trapped and vented at mech. equip. and connected to location shown on plan.
16. All condensate lines shall be sized in accordance with manufac- turer's specifications, but in no case less than 3/4" 40 PVC.
17. Provide access panels for all trap primers.
18. Insulate all condensate drain lines which are located inside the bldg. envelope with 3/8", armaflex or equal.
19. Field verify the exact location, depth, and size of all plbg. utilities prior to the commencement of any work.
20. Flash all pipe penetrations thru the roof in a water-tight manner.
21. trap bags need to comply w/ASTM E-84 25/450 22. Water fixtures 1/2" min. pipe size, 1-1/2" recomended.
22. No flush-type urinals allowed.
23. Check water pressure before flushometer fixture installation.
24. Roof drains shall be installed to receive A/C condensation drainage, one roof drain per every two A/C units. Roof drain discharge shall be conected to the sewer line.

SPECIAL NOTES

1.-CONNECT 2"ø AND 4"ø NEW SANITARY LINES TO EXISTING 4"ø SANITARY WASTE BELOW FLOOR SLAB. CONTRACTOR TO FIELD VERIFY EXACT LOCATION OF EXISTING 4"ø SANITARY WASTE PRIOR TO COMMENCING WORK. CONTRACTOR SHALL BE RESPONSIBLE FOR ALL CUTTING AND PATCHING FLOOR SLAB AS REQUIRED.
2.-ALL EXPOSED PLUMBING, WATER, GAS AND ELECTRICAL LINES/CONDUITS MUST BE INSTALLED AT LEAST 6" ABOVE FLOOR AND AT LEAST 1" AWAY FROM WALLS. (114155).
3.-WHERE PIPES ENTER A WALL, CEILING OR FLOOR, THE OPENING AROUND THE LINE MUST BE TIGHTLY SEALED. (114145, 114030).
4.-POTABLE WATER SUPPLY SHALL BE PROTECTED WITH A BACKFLOW OR BACK-SIPHONAGE PROTECTION DEVICE.
5.-ALL SINKS MUST BE EQUIPPED WITH HOT AND COLD WATER DISPENSED FROM MIXING FAUCETS. HOT WATER MUST BE 49 CELSIUS (120 DEGREES FAHRENHEIT). (114090, 114095).
6.-ONLY WARM WATER MAY BE PROVIDED IF THE WATER SUPPLY IS USED ONLY FOR HANDWASHING, AS REQUIRED IN SECTION 113953, 114192 (d).
7.- SEWER AND WATERLINES LOCATION IS SCHEMATIC, CONTRACTOR TO FOLLOW THE SHOWN LINE PATH AS POSSIBLE AND ARRANGE LOCATION AND CONNECTIONS AS THE BEST OF HIS KNOWLEDGE.

LEGEND

SYMBOL	DESCRIPTION
	EXIST. SCH 40 ABS SEWER LINE
	NEW SCH 40 ABS SEWER LINE (DIAM. AS PER PLAN)
	EXIST. COPPER TYPE "M" WATER LINE
	EXIST. COPPER HOT WATER LINE
	EXIST. SEWER CLEAN OUT
	HOSE BIB
	NEW COPPER TYPE "M" WATER LINE
	NEW COPPER HOT WATER LINE
	COPPER REDUCTION
	SEWER CLEAN OUT
	SEWER DISCHARGE
	FLOOR DRAIN
	HOSE BIB
	EXIST. DOWNSPOUT/OVERFLOW DRAIN
	PROPOSED NEW DOWNSPOUT/OVERFLOW DRAIN

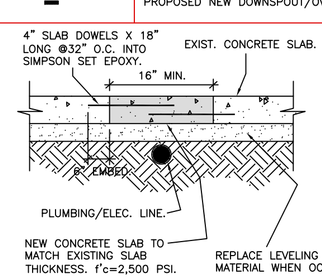

CONCRETE SLAB PATCHING DETAIL (1) N.T.S.

STANDARD FIXTURE ACCESSORY SCHEDULE

FIXTURE	MANUFACTURER/MODEL	REMARKS	KEYNOTE REF.
1-½" DIAMETER STAILESS STEEL 36" LONG. GRAB BAR WITH SNAP FLANGE AND SATIN FINISH.	BOBRICK B6806 X36		30
1-½" DIAMETER STAILESS STEEL 42" LONG. GRAB BAR WITH SNAP FLANGE AND SATIN FINISH.	BOBRICK B6806 X42		31
PARTITION MOUNTED CLOTHES HOOK.	BOBRICK B233	ON BACK OF DOOR.	32
WALL MOUNTED TOILET SEAT COVER DISPENSER.	BOBRICK B-2111		33
ADA APPROVED PLUMBING FIXTURE INSULATING COVER.	KIT PAK 2003 WHITE	FOR USE W/ALL SINKS/LAVATORIES.	34
WALL MOUNTED SOAP DISPENSER.	BOBRICK B82216	FOR USE W/ALL WALL MOUNTED LAVATORIES.	35
¼" CLEAR PLATE WALL GLASS MIRROR WITH POLISHED EDGE AND NO FRAME.		MIRROR CUSTOM CUT TO SIZE.	36
ROLL PAPER HOLDER WITH NO STOPS.	BOBRICK BOB 667		37
WALL MOUNTED PAPER TOWEL DISPENSER.	BOBRICK BOB 262		38
WALL MOUNTED ELECTRICAL HAND DRYER PALMER FIXTURE.	ECOSTORM H0941 SS	(OPTIONAL)	39

FIXTURE SCHEDULE

SYMBOL	FIXTURE	SIZE/TYPE	MANUFACTURER/ MODEL	BASELINE FLOW RATE	COLOR	CARRIER/TRAP	PIPING SOIL	PIPING VENT	PIPING C.W.	PIPING H.W.	REMARKS	KEYNOTE REF.
	HC. LAVATORY WALL MOUNTED	SELF-RIM. OVAL	MANSFIELD,1917C-4 W.R. (OR APP. EQ.)	0.5 GPM @60 PSI	WHITE	JOSAM 17100-63 1-1/4" 17GA "P" TRAP ,TRAP BAGS	2"	2"	1/2"	1/2"	2411.015 DRAIN, CHICAGO 802A-335 & L.K. STOPS. PRICE PFISTER FAUCET, FLEX, RISERS PROVIDE ADDITIONAL STEEL ANGLE SUPPORTS.	40
	HANDICAP WATER CLOSET	TWO PIECE ELONGATED	MANSFIELD, EASTON (OR APP. EQ.)	1.28 GAL/ FLUSH	WHITE	FLR. MTD. INTEGRAL	4"	2"	1"	–	FLEX, RISER & L.K. STOP, BOLT CAPS, STD. TANK FTGS. OLSONITE 10CC WHITE SEAT.	41
	SINGLE BOWL TOP MOUNTED SINK. A.D.A. APP.	15"x15"	ELKAY NEPTUNE MOD. NES15152 (OR APP. EQ.)	0.5 GPM @60 PSI	SILVER/ POLISH		2"	2"	1/2"	1/2"		42
WH	ELECT. COMMERCIAL WATER HEATER SHELF, 50 GAL. 26-1"ø x 43-¾" HT.		RHEEM-RUUD, MODEL ES50-12-G (OR APP. EQ.)		WHITE				3/4"	3/4"	12KW/240V/3"ø. 99 GAL/HR (GPH) @ 50° RISE. 1-¾" HOT OUTLET AND COLD INLET NPT DIELECTRIC NIPPLE WATER CONNECTION.	43
	WALL MOUNTED URINAL	WASH DOWN	MANSFIELD, 401 ADAM (OR APP. EQ.)	0.5 GAL/ FLUSH	WHITE		1-½"	2"	1"	–	PROVIDE ADDITIONAL STEEL ANGLE SUPPORTS, CONCEALED HANGER AND BOLTS.	44
	FLOOR SINK											45
	FOOD PREPARATION/ VEGETABLE SINK	1 COMPARTMENT SINK WITH 18" INTEGRAL DRAINBOARD	AERO SINK BRAND, MODEL MF1-2116-18 NSF APPROVED.	2.2 GPM @60 PSI			2"	2"	1/2"	1/2"	INTEGRAL DRAINBOARD (LEFT), 21" FRONT TO BACK X 16" WIDESINK COMPARTMENTS, 14" DEEP 16/304 STAINLESS STEEL BOWLS, GALVANIZED GUSSETS AND TUBULAR LEGS WITH ADJUSTABLE ABS FEET. NSF APPROVED.	46
	BABY CHANGING STATION	35"Wx22-1/2"H	KOALA KARE MOD. KB 900		WHITE						HORIZONTAL TABLE	47

WATER HEATER NOTE:

AN EXPANSION TANK OR OTHER APPROVED DEVICE IS REQUIRED IF SYSTEM PRESSURE RELIEF IS NOT AVAILABLE DUE TO THE INSTALLATION OF BACKFLOW DEVICES OR CERTAIN PRESSURE REGULATORS.

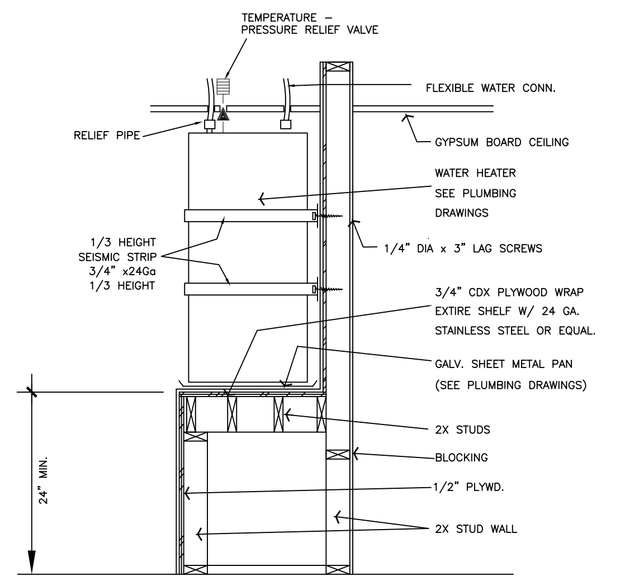

WATER HEATER SHELF (2) N.T.S.

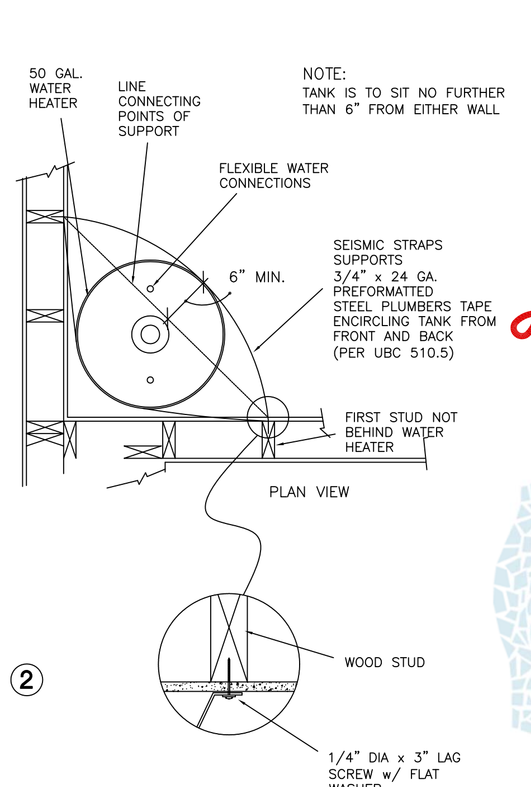

SHEET: 14
OF: 27
DWN. BY: A.A.
REV. BY: O.M.
APP. BY: J.G.

LIBRARY EXPANSION PROJECT

PLUMBING PLAN

DATE: 10/09/15

IN THE CITY OF IMPERIAL, CALIFORNIA

P1

REGISTERED PROFESSIONAL ENGINEER ROBERTO C. MARTINEZ No. C-74475 STATE OF CALIFORNIA CIVIL

SEAL:

BY: ROBERTO C. MARTINEZ
653 W. MAIN ST. SUITE 103
EL CENTRO, CA 92243
DATE: 05/14/15
R.C.E. NO. C-74475

REVISIONS

NO.	DESCRIPTION:	DATE:	BY:
1			
2			
3			

City of Imperial California

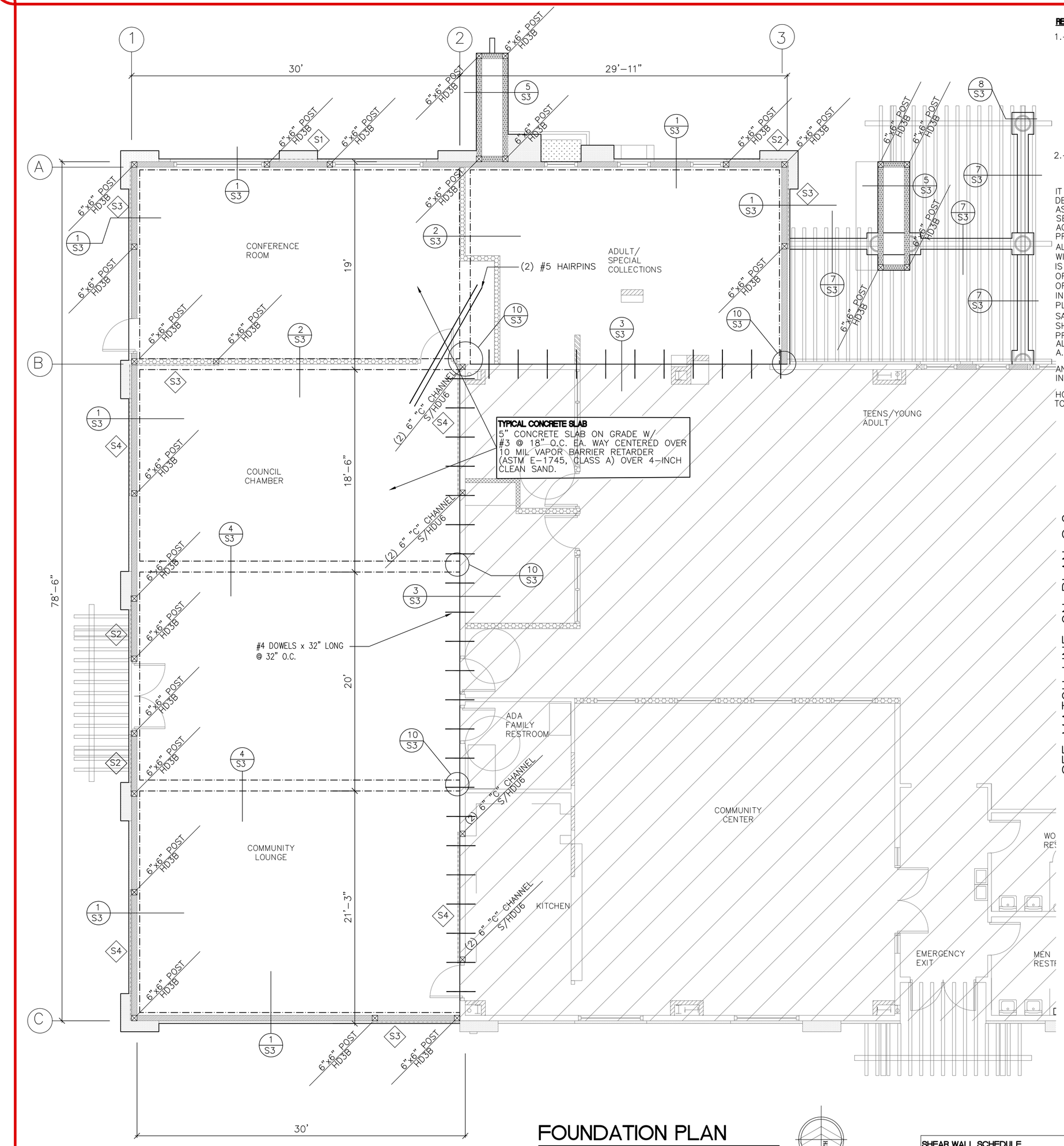

FOUNDATION PLAN

SCALE 3/16" = 1'-0"

NOTE:
1.- SHEAR WALL NAILING APPLIES TO STUDS TOP & BOTTOM PLATES & BLOCKING, U.N.O., FIELD NAILING FOR SHEATHING TO BE 10" O.C.
2.- USE COMMON WIRE NAILS, U.N.O.
3.- PROVIDE 8" MINIMUM EMBEDMENT FOR ANCHOR BOLTS
4.- ALL PANEL EDGES SHALL BE BLOCKED
5.- PROVIDE SQUARE STEEL PLATE WASHERS OF MINIMUM 3"x3" EACH WOOD PLATE OR SILL PLATE BOLT.

SHEAR WALL SCHEDULE

SYMBOL	SHEAR WALL THICKNESS/ PANEL GRADE	SHEAR WALL LENGTH (FT)	SHEAR WALL EDGE NAILING (E.N)	END STUDS (PANEL JTS.) MIN., U.N.O.	5/8" DIA. (U.N.O.) ANCHOR BOLTS (3) (5)	SILL PLATE
S1	15/32" STRUC-1	6'-0"	8d AT 6" O.C.	2x DFL	32" O.C.	2x PTDF
S2	15/32" STRUC-1	6'-0"	8d AT 4" O.C.	3x DFL	24" O.C.	3x PTDF
S3	15/32" STRUC-1	8'-0"	8d AT 3" O.C. STAGGERED	3x DFL	24" O.C.	3x PTDF
S4	15/32" STRUC-1	12'-0"	10d AT 2" O.C. STAGGERED	4x DFL	16" O.C.	3x PTDF

REINFORCED CONCRETE NOTES:

1.- THE MINIMUM 28-DAY CYLINDER STRENGTH SHALL BE AS FOLLOWS, U.N.O.

CONCRETE ELEMENT	F'c
SPREAD/PAD FOOTINGS	2500 PSI

ALL CONCRETE REQUIRED TO BE MORE THAN 2500 PSI SHALL HAVE SPECIAL INSPECTION PER 2012 IBC 1705.3.

2.- PORTLAND CEMENT SHALL CONFORM TO ASTM C 150, TYPE I OR II

IT SHALL BE THE CONTRACTORS RESPONSIBILITY TO DETERMINE IF ANY SPECIAL ADMIXTURES ARE REQUIRED FOR THIS JOB FOR ITEMS SUCH AS: IMPROVE DURABILITY, WATER REDUCTION, RETARDING SETTING TIME, ACCELERATING SETTING TIME, TEMPERATURE CONTROL, ELIMINATE ADVERSE EFFECTS OF REACTIVE AGGREGATES, IMPROVE WORKABILITY, PROVIDE WATER TIGHTNESS OR PROVIDE EXPANSION PRIOR TO HARDENING.

ALL REINFORCING STEEL SHALL BE ADEQUATELY SUPPORTED BY CONCRETE CUBES W/ TIE WIRE, SPACERS, ETC. AND SHALL BE SECURELY TIED IN PLACE, BEFORE CONCRETE PLACING IS BEGUN. LAP SPLICE CONTINUOUS REINFORCING STEEL 40 BAR DIAMETERS IN CONCRETE, OR 24 INCHES, WHICH EVER IS GREATER. STAGGER ALL SPLICES. JOINTS: THE LOCATION OF ALL CONSTRUCTION, CONTROL AND WEAKENED PLANE JOINTS NOT SPECIFICALLY INDICATED ON THE DRAWINGS SHALL BE APPROVED BY THE ENGINEER PRIOR TO THE PLACING OF THE CONCRETE. CONTROL JOINTS SHALL BE TOOLED AT TIME OF POUR OR SAW-CUT (WITH A "SOFT CUT" SAW) IMMEDIATELY AFTER FINISHING THE SLAB. FOOTINGS SHALL EXTEND A MINIMUM OF 12 INCHES INTO FIRM UNDISTURBED NATURAL SOIL OR PROPERLY COMPACTED FILL.
ALL ANCHOR BOLTS SHALL BE GRADE "A" CONFORMING TO A.S.T.M. A-307

ANCHOR BOLTS SHALL BE SECURELY TIED IN PLACE PRIOR TO THE INSPECTING OR PLACING OF THE CONCRETE.

HOLD-DOWNS SHALL BE SECURELY NAILED TO THE FORMS PRIOR TO THE INSPECTING OF THE CONCRETE POUR.

BUILDING CODE CRITERIA

ALL WORK SHALL BE DONE IN ACCORDANCE WITH THE FOLLOWING CODES AS WELL AS FIRE CODES AND/OR LOCAL CODES AND ORDINANCES:
- 2013 CALIFORNIA BUILDING CODE (CBC)
- 2012 INTERNATIONAL BUILDING CODE (IBC)
- AMERICAN CONCRETE INSTITUTE (ACI)

GENERAL NOTES

SEQUENCES, PROCEDURES, OR FOR SAFETY PRECAUTIONS AND PROGRAMS OR FOR THE CONTRACTORS FAILURE TO PERFORM THE WORK IN ACCORDANCE WITH THE CONTRACT DOCUMENTS.
THE ENGINEER SHALL NOT BE RESPONSIBLE FOR THE ACTS OF OMISSIONS OF THE CONTRACTOR OR ANY SUBCONTRACTOR OR FOR ANY OF THE WORK AGENTS OR EMPLOYEES OR ANY OTHER PERSON PERFORMING ANY OF THE WORK.
IT SHALL BE THE RESPONSIBILITY OF THE CONTRACTOR TO ADEQUATELY SUPPORT ALL WALLS, TRUSSES, ETC. DURING CONSTRUCTION. THE CONTRACTOR SHALL DESIGN, CONSTRUCT AND MAINTAIN ALL SAFETY DEVICES, INCLUDING SHORING AND BRACING AND SHALL BE SOLELY RESPONSIBLE FOR CONFORMING TO ALL LOCAL, STATE AND FEDERAL SAFETY AND HEALTH STANDARDS, LAWS AND REGULATIONS.
THE CONTRACTOR SHALL VERIFY ALL DIMENSIONS, ELEVATIONS AND SITE CONDITIONS BEFORE STARTING WORK, AND SHALL NOTIFY THE ENGINEER IMMEDIATELY OF ANY DISCREPANCIES.
NOTES AND DETAILS ON THE DRAWINGS SHALL TAKE PRECEDENCE OVER THESE GENERAL NOTES, IN CASE OF CONFLICT.
WHERE NO CONSTRUCTION DETAILS ARE SHOWN OR NOTED FOR ANY PART OF THE WORK, SUCH DETAILS SHALL BE THE SAME AS FOR SIMILAR WORK SHOWN ON THE DRAWINGS.
SHOULD DISCREPANCIES OCCUR ON THESE PLANS, THE CONTRACTOR SHALL NOTIFY THE ENGINEER IMMEDIATELY.
THESE DRAWINGS ARE NOT TO BE SCALED FOR DIMENSIONAL INFORMATION. ACTUAL DIMENSION NUMBERS SHOWN ON THE PLANS ARE TO BE USED. IF DIMENSIONAL CONFLICTS EXIST, NOTIFY THE ENGINEER IMMEDIATELY. ANY CONTRACTOR SCALING DRAWINGS FOR ANY PURPOSE, DOES SO AT HIS OWN RISK AND IS RESPONSIBLE FOR ANY ERRORS AND MISTAKES WHICH MAY RESULT.

2013 CALIFORNIA BUILDING CODE (CBC) + ASCE 7-10 SEISMIC PARAMETERS

SITE CLASS = D
RISK CATEGORY = II
SEISMIC DESIGN CATEGORY = D

MAPPED MCE SHORT PERIOD SPECTRAL RESPONSE Ss = 1.82 g
MAPPED MCE 1 SECOND SPECTRAL RESPONSE S1 =0.669 g
SHORT PERIOD (0.2s) SITE COEFFICIENT Fa = 1.00
LONG PERIOD (1.0s) SITE COEFFICIENT Fv = 1.50
MCE SPECTRAL RESPONSE ACCELERATION PARAMETER (0.2s) SMS =1.823 g
MCE SPECTRAL RESPONSE ACCELERATION PARAMETER (1.0s) SM1 =1.004 g
DESIGN SPECTRAL RESPONSE ACCELERATION PARAMETER (0.2s) SDs =1.215 g
DESIGN SPECTRAL RESPONSE ACCELERATION PARAMETER (1.0s) SD1 =0.669 g
ALLOWABLE SOIL BEARING PRESSURE = 2000 PSF

BUILDING PAD PREPARATION AS PER SOILS REPORT LCI REPORT No LEI4210

THE EXPOSED SURFACE SOIL WITHIN THE BUILDING PAD/FOUNDATION AREA SHOULD BE REMOVED TO 3 FEET BELOW THE BUILDING PAD ELEVATION OR EXISTING NATURAL SURFACE GRADE (WHICHEVER IS LOWER) EXTENDING FIVE FEET BEYOND ALL EXTERIOR WALL/COLUMN LINES (INCLUDING CONCRETED AREAS ADJACENT TO THE BUILDING).

AN ENGINEERED BUILDING SUPPORT PAD CONSISTING OF 3.0 FEET OF GRANULAR SOIL PLACED IN MAXIMUM 8 INCH LIFTS (LOOSE), COMPACTED TO A MINIMUM OF 90% OF ASTM D1557 MAXIMUM DENSITY AT 2% BELOW TO 4% ABOVE OPTIMUM MOISTURE, SHOULD BE PLACE BELOW THE BOTTOM OF ALL STRUCTURAL SLABS AND 2 FEET OF GRANULAR SOIL BELOW SITE HARDSCAPE AREAS.

DESIGN LOADS:

ROOF DEAD LOAD=19 PSF
ROOF LIVE LOAD =20 PSF

ANCHORAGE SYSTEM

SOLE PLATE ANCHORS ARE TO BE 5/8"øx12" LONG A-307 BOLTS W/ 3"x3"x1/4" PLATE WASHER, MINIMUM CONCRETE EMBEDMENT OF 7" & LOCATED NOT LESS THAN 4" AND NOT MORE THAN 12" FROM PLATE END.

OR ADDED AT JOINTS IN PLATES. TITEN REQUIRES A MINIMUM OF 4-1/8" EMBEDMENT

PARTITION WALL NOTES:

ALL NEW PARTITION WALLS TO RECIEVE 3" HILTI "XZ-F DRIVE PIN I.C.B.O. # 1290 AT 32" CC (TYP.) AT INTERIOR NON-BEARING WALLS - 1" MIN. FROM EDGE OF BASE PLATE / 6" MIN. FROM END OF WALL

A 10-MIL POLYETHYLENE OR APPROVED VAPOR RETARDER WITH JOINTS LAPPED NOT LESS THAN 6" SHALL BE PLACED BETWEEN THE CONCRETE FLOOR SLAB AND THE BASE COURSE OR THE PREPARED SUBGRADE WHERE NO BASE COURSE EXISTS. (EXCEPTIONS : DETACHED GARAGES, UTILITY BUILDINGS AND OTHER UNHEATED ACCESSORY STRUCTURES.)

CONTRACTOR RESPONSIBILITY . EACH CONTRACTOR OR SUBCONTRACTOR IS RESPONSABLE FOR THE CONSRUCTION OF THE WIND AND/OR SEISMIC RESISTING SYSTEM THAT IS LISTED IN THE STATEMENT OF SPECIAL INSPECTIONS AND SHALL SUBMIT A WRITTEN STATEMENT OF RESPONSIBLITY TO THE BUILDING OFFICIAL AND THE OWNER PRIOR TO THE COMMENCEMENT OF WORK REQUIRING SPECIAL INSPECTION.

IN ADDITION TO THE REGULAR INSPECTIONS, THE FOLLOWING CHECKED ITEMS ALSO REQUIRE SPECIAL INSPECTION IN ACCORDANCE WITH SECTION 1704.3 AND TABLE 1704.4 OF THE IBC.

ITEM	REQUIRED	REMARKS	CONTINUOUS
WELDING	YES	E70XX TYPICAL	
MASONRY CONSTRUCTION	NO		
WOOD CONSTRUCTION	YES	NAILING, BOLTING, ANCHORING, SHEAR WALLS.	PERIODIC
CONCRETE CONSTRUCTION	YES	MAT.VERIFICATION, REINFORCING STEEL, BOLTING.	PERIODIC
SOILS COMPLIANCE PRIOR TO FOUNDATION INSPECTION	YES		
STRUCTURAL CONCRETE TILT-UP PANELS OVER 2500 PSI	NO		
EPOXY ANCHOR INSTALLATION	YES	THREADED RODS ON EXISTING FOOTINGS	PERIODIC
FOUNDATIONS	YES		
OTHER	NO		

SHEET: 15 OF: 27
DWN. BY: J.F.
REV. BY: R.M.
APP. BY: O.M.

LIBRARY EXPANSION PROJECT
FOUNDATION PLAN

IN THE CITY OF IMPERIAL, CALIFORNIA
DATE: 04/24/15

S1

REVISIONS

NO.	DESCRIPTION:	DATE:	BY:
1			
2			
3			

SEAL:

BY: ROBERTO C. MARTINEZ
653 W. MAIN ST. SUITE 103
EL CENTRO, CA 92243
DATE: 4/24/2015
R.C.E. NO. C-74475

City of Imperial California

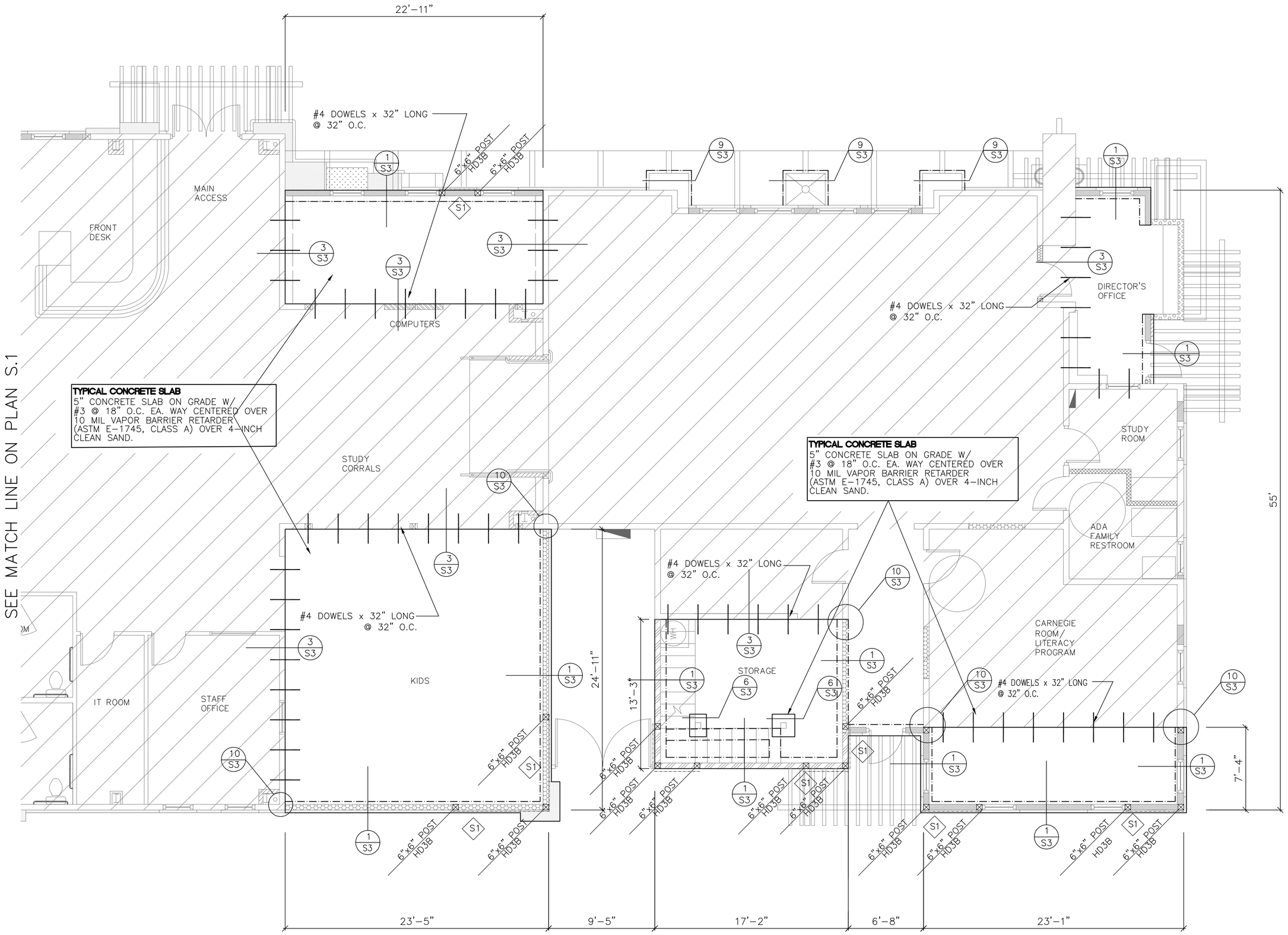

FOUNDATION PLAN

SCALE 3/16" = 1'-0"

SHEAR WALL SCHEDULE

SYMBOL	SHEAR WALL THICKNESS/ PANEL GRADE	SHEAR WALL EDGE NAILING (E.N)	END STUDS (PANEL JTS.) MIN., U.N.O.	5/8" DIA. (U.N.O.) ANCHOR BOLTS (3) (5)	SILL PLATE
S1	15/32" STRUC-1	8d AT 6" O.C.	2x DFL	32" O.C.	2x PTDF
S2	15/32" STRUC-1	8d AT 4" O.C.	3x DFL	24" O.C.	3x PTDF
S3	15/32" STRUC-1	8d AT 3" O.C. STAGGERED	3x DFL	24" O.C.	3x PTDF
S4	15/32" STRUC-1	10d AT 2" O.C. STAGGERED	4x DFL	16" O.C.	3x PTDF

NOTE:
1.- SHEAR WALL NAILING APPLIES TO STUDS TOP & BOTTOM PLATES & BLOCKING, U.N.O., FIELD NAILING FOR SHEATHING TO BE 10" O.C.
2.- USE COMMON WIRE NAILS, U.N.O.
3.- PROVIDE 8" MINIMUM EMBEDMENT FOR ANCHOR BOLTS
4.- ALL PANEL EDGES SHALL BE BLOCKED
5.- PROVIDE SQUARE STEEL PLATE WASHERS OF MINIMUM 3"x3" EACH WOOD PLATE OR SILL PLATE BOLT.

SHEET: 16
OF: 27
DWN. BY: J.F.
REV. BY: R.M.
APP. BY: O.M.

LIBRARY EXPANSION PROJECT

FOUNDATION PLAN

IN THE CITY OF IMPERIAL, CALIFORNIA | DATE: 04/24/15

S2

SEAL: PROFESSIONAL ENGINEER * REGISTERED * No. C-74475 * STATE OF CALIFORNIA * CIVIL

BY: ROBERTO C. MARTINEZ
653 W. MAIN ST. SUITE 103
EL CENTRO, CA 92243
DATE: 04/24/2015
R.C.E. NO. C-74475

REVISIONS

NO.	DESCRIPTION:	DATE:	BY:
1			
2			
3			

City of Imperial California

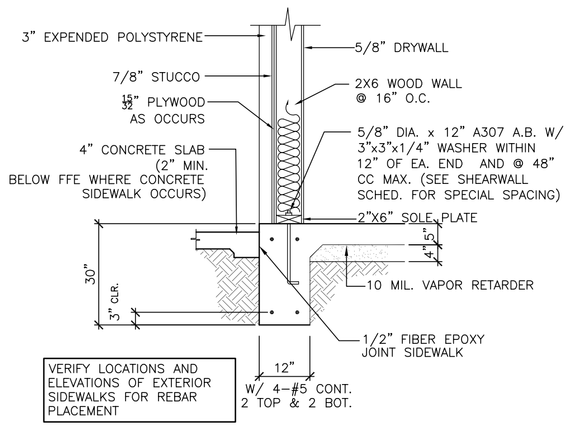

1 PERIM. FTG.
SCALE: 1/2"=1'-0"

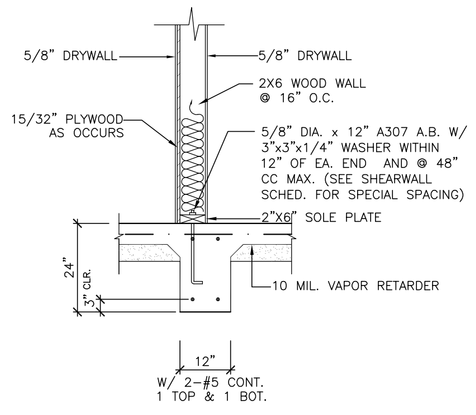

2 INTERIOR FTG.
SCALE: 1/2"=1'-0"

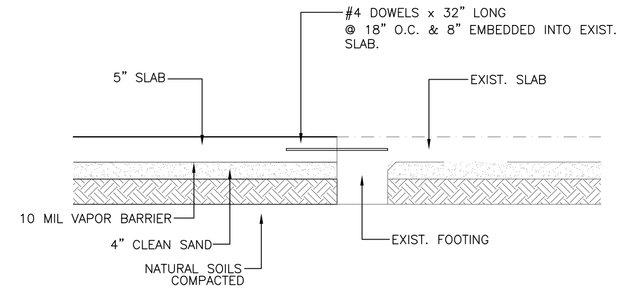

3 NEW SLAB/EXIST. FOOTING
NOT TO SCALE

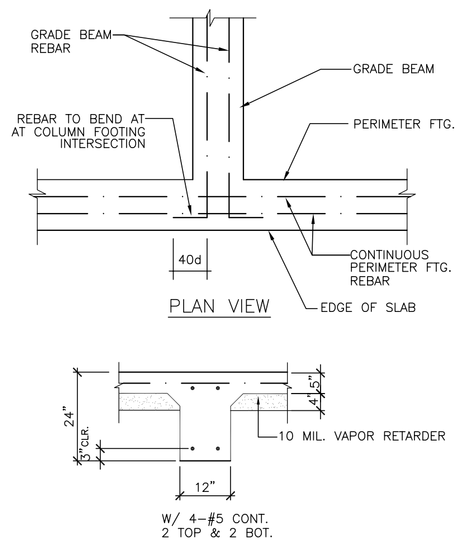

4 GRADE BEAM FTG.
SCALE: 1/2"=1'-0"

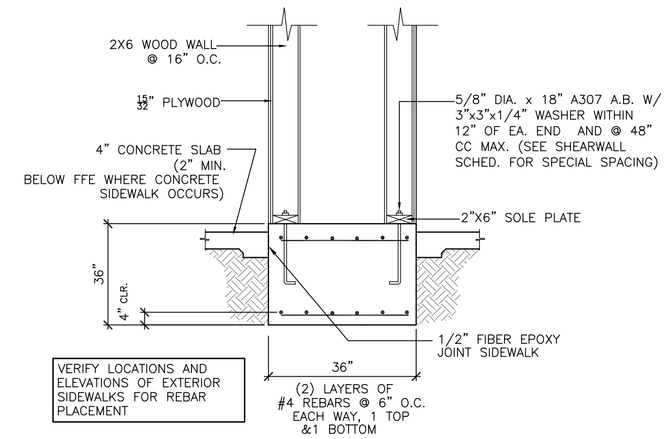

5 PERIM. FTG.
SCALE: 1/2"=1'-0"

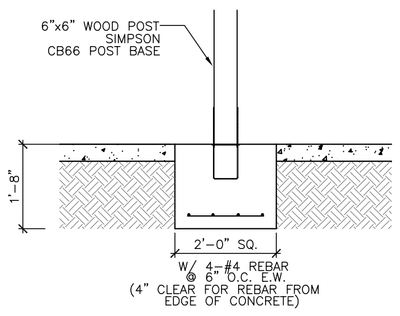

6 COL. FTG.
SCALE: 3/4"=1'-0"

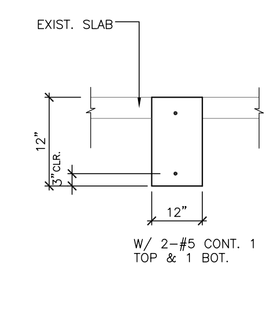

7 GRADE BEAM FTG.
SCALE: 1/2"=1'-0"

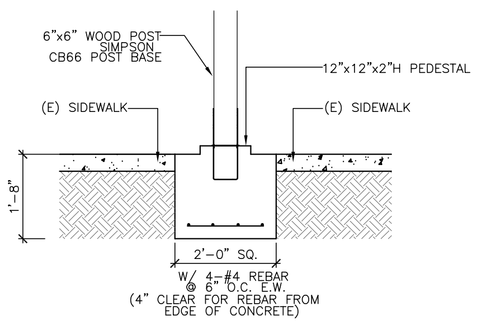

8 PORCH FTG.
SCALE: 3/4"=1'-0"

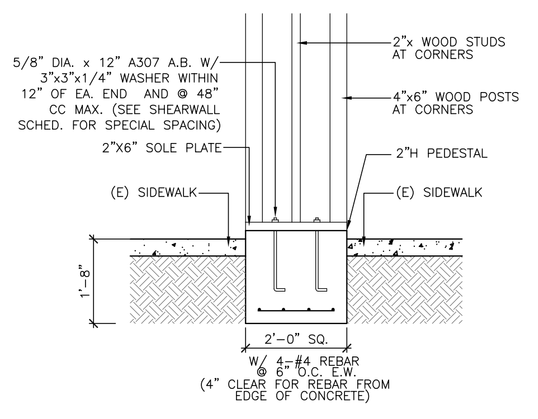

9 COLUMNS FTG.
SCALE: 3/4"=1'-0"

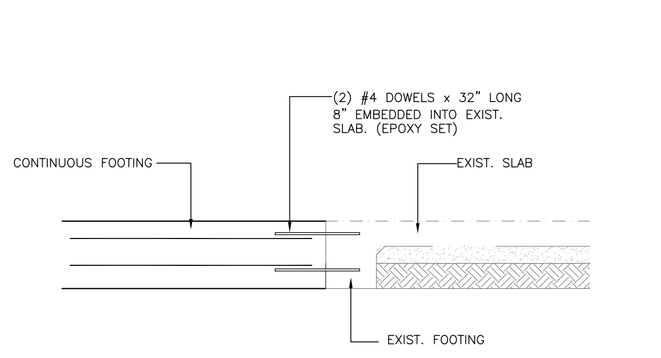

10 NEW FOOTING/EXIST. FOOTING
NOT TO SCALE

EPOXY NOTES:
THE SPECIAL INSPECTOR WILL VERIFY THE DRILLING OF ANY HOLES, THE CLEANLINESS OF THE HOLE , THE MOISTURE IN THE HOLE, MIXING THE EPOXY, THE BRAND OF THE EPOXY AND THE PROPER MATERIAL FOR THE ASSEMBLY. SET THREADED ROD, BOLTS AND/OR DOWELS EMBEDDED 8" INTO CONCRETE USING ONE OF THE EPOXY PRODUCTS LISTED BELOW. SET IN CLEAN, PREDRILLED HOLE. HOLE MUST BE THE THREADED ROD, BOLT, AND OR DOWEL SIZE DIAMETER + 1/4" DIAMETER.

HILTI HIT RE 500 SD EPOXY (ICC ES ESR-2322)
SIMPSON SET (ICC ES ESR-1772)
INSTALLATION TO INSURE THAT THE REBARS ARE INSTALLED PER ICBO APPROVAL FOR THE PRODUCT USED.

* SPECIAL INSPECTION WILL BE REQUIRED FOR THIS EPOXY INSTALLATION TO INSURE THAT THE BOLTS ARE INSTALLED PER ICBO APPROVAL FOR THE PRODUCT USED.

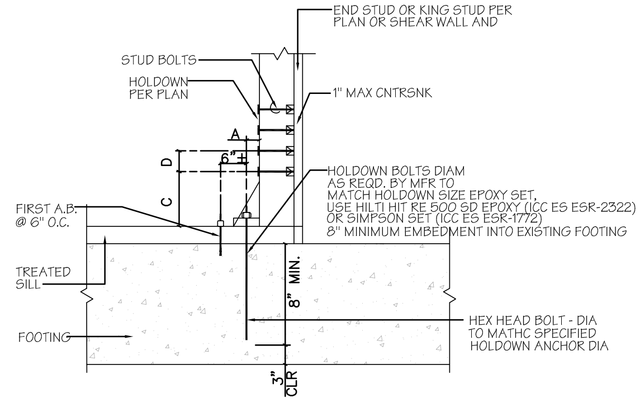

HOLDOWN ON EXISTING FOOTING
NOT TO SCALE

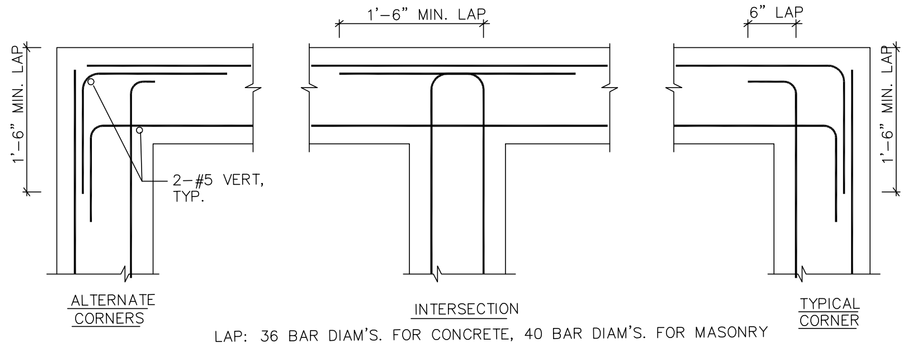

LAP: 36 BAR DIAM'S. FOR CONCRETE, 40 BAR DIAM'S. FOR MASONRY

NOTE:
WHERE SINGLE LAYER OF REINFORCING OCCURS, BEND STEEL AS SHOWN FOR OUTSIDE BARS.

REINF. AT INTERSECTION OF CONC. & MASONRY WALLS, FTG., & BMS.
NOT TO SCALE

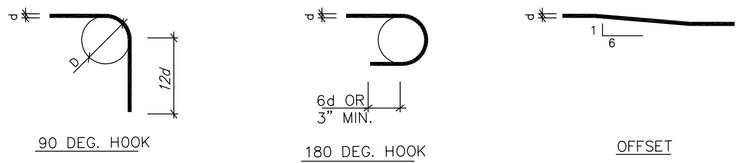

D - 6d FOR #3 THRU #8 NOTE:
D - 8d FOR #9 THRU #11 ALL BENDS SHALL BE MADE COLD
D - 10d FOR #14 THRU #18

REBAR BENDS & END HOOKS
NOT TO SCALE

SHEET: 17
OF: 27
DWN. BY: J.F.
REV. BY: R.M.
APP. BY: O.M.

LIBRARY EXPANSION PROJECT

FOOTINGS DETAILS

IN THE CITY OF IMPERIAL, CALIFORNIA | DATE: 04/24/15

S3

SEAL:

BY: ROBERTO C. MARTINEZ
653 W. MAIN ST. SUITE 103
EL CENTRO, CA 92243
DATE: 4/24/2015
R.C.E. NO. C-74475

REVISIONS

NO.	DESCRIPTION:	DATE:	BY:
1	△		
2	△		
3	△		

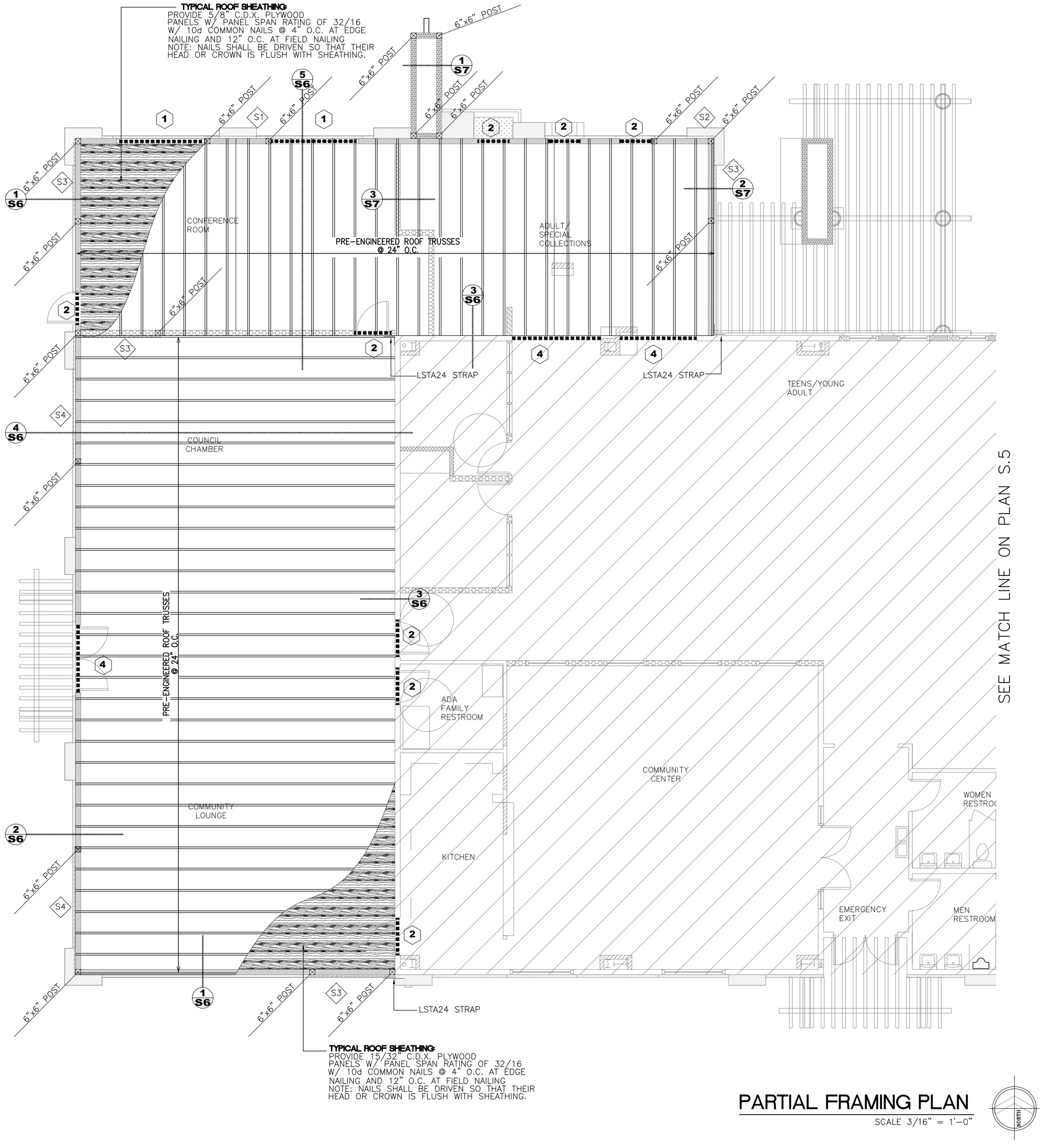

PARTIAL FRAMING PLAN

SCALE 3/16" = 1'-0"

BEAM SCHEDULE	
SYMBOL	BEAM SIZE
1	6"x8"
2	6"x6"
3	6"x8"
4	6"x10"
5	6"x6"
6	6"x14"

SHEATHING NOTES:

1.– PLACE ROOF SHEATHING WITH END JOINTS STAGGERED, SECURE SHEETS OVER FIRM BEARING WITH 8d COMMON NAILS AT 6" O.C. AT PANEL EDGES, AT 12" O.C. AT INTERMEDIATE SUPPORTS.
2.– ALL SHEATHING TO BE PLACED PERPENDICULAR TO FRAMING MEMBERS.
3.– SHEATHING WHICH RECEIVES LIGHTWEIGHT INSULATING CONCRETE TO BE COVERED WITH 4 MIL. POLYETHYLENE FILM.
4.– LEAVE 1/8" SPACE AT ALL PANEL EDGE JOINTS AND END JOINTS UNLESS OTHERWISE RECOMMENDED BY MANUFACTURER.
5.– THE SPACING IN INCHES OF ROOF SUPPORTS OVER WHICH PANELS ARE APPLIED SHALL NOT EXCEED THE SPAN RATING OF THE PANELS.

TIMBER NOTES:

1.– SAWN LUMBER SHALL BE DOUGLAS FIR–LARCH CONFORMING TO THE 2013 CBC SECTION 2303 AND ANSI/AWC NDS–2012 NATIONAL DESIGN SPECIFICATION FOR WOOD CONSTRUCTION (AND SUPPLEMENT) REVISED 2012, AND SHALL BE GRADE MARKED BY EITHER WCIB OR WWPA.
2.– SAWN STRUCTURAL FRAMING MEMBERS SHALL BE AS FOLLOWS (U.N.O)

MEMBERS	GRADE
2x WALL STUDS	DOUGLAS FIRCH #1
2x FLOOR JOIST AND ROOF RAFTERS	DOUGLAS FIRCH #1
BEAMS, HEADERS AND POSTS	DOUGLAS FIRCH #1

SHEAR WALL SCHEDULE

SYMBOL	SHEAR WALL THICKNESS/ PANEL GRADE	SHEAR WALL LENGTH (FT)	SHEAR WALL EDGE NAILING (E.N)	END STUDS (PANEL JTS.) MIN., U.N.O.	5/8" DIA. (U.N.O.) ANCHOR BOLTS (3) (5)	SILL PLATE
S1	15/32" STRUC–1	6'–0"	8d AT 6" O.C.	2x DFL	32" O.C.	2x PTDF
S2	15/32" STRUC–1	6'–0"	8d AT 4" O.C.	3x DFL	24" O.C.	3x PTDF
S3	15/32" STRUC–1	8'–0"	8d AT 3" O.C. STAGGERED	3x DFL	24" O.C.	3x PTDF
S4	15/32" STRUC–1	12'–0"	10d AT 2" O.C. STAGGERED	4x DFL	16" O.C.	3x PTDF

NOTE:
1.– SHEAR WALL NAILING APPLIES TO STUDS TOP & BOTTOM PLATES & BLOCKING, U.N.O., FIELD NAILING FOR SHEATHING TO BE 10" O.C.
2.– USE COMMON WIRE NAILS, U.N.O.
3.– PROVIDE 8" MINIMUM EMBEDMENT FOR ANCHOR BOLTS
4.– ALL PANEL EDGES SHALL BE BLOCKED
5.– PROVIDE SQUARE STEEL PLATE WASHERS OF MINIMUM 3"x3" EACH WOOD PLATE OR SILL PLATE BOLT.

NAILING SCHEDULE — TABLE 2304.9.1

CONNECTION	FASTENING	LOCATION
JOIST TO SILL OR GIRDER	3–8d COMMON, 3–3"x0.131" NAILS OR 3–3" 14 GAGE STAPLES	TOENAIL
BRIDGING TO JOIST	2–8d COMMON, 2–3"x0.131" NAILS OR 2–3" 14 GAGE STAPLES	TOENAIL EA. END
1"x6" SUBFLOOR OR LESS TO EACH JOIST	2–3d COMMON	FACENAIL
WIDER THAN 1"x6" SUBFLOOR TO EA. JOIST	3–8d COMMON	FACENAIL
2" SUBFLOOR TO JOIST OR GIRDER	2–16d COMMON	BLIND AND FACENAIL
SOLE PLATE TO JOIST OR BLOCKING	16d @ 16" O.C., 3"x0.131" NAILS @ 8" O.C. OR 3" 14 GAGE STAPLES	TYP. FACENAIL
SOLE PLATE TO JOIST OR BLOCKING AT BRACED WALL PANEL	3–16d @ 16", 4"x0.131" NAILS @ 8" O.C. OR 4–3" 14 GAGE STAPLES PER 16"	BRACED WALL PANELS
TOP PLATE TO STUD	2–16d COMMON, 3–3"x0.131" NAILS OR 3–3" 14 GAGE STAPLES	END NAIL
STUD TO SOLE PLATE	4–8d COMMON, 4–3"x0.131" NAILS OR 3–3" 14 GAGE STAPLES	TOENAIL
	2–16d COMMON, 3–3"x0.131" NAILS OR 3–3" 14 GAGE STAPLES	ENDNAIL
DOUBLE STUDS	16d @ 24" O.C., 3–3"x0.131" NAILS @ 12" O.C. OR 3" 14 GAGE STAPLE @ 8" O.C.	FACENAIL
DOUBLE TOP PLATES	16d @ 16" O.C., 3"x0.131" NAIL @ 12" O.C., OR 3" 14 GAGE STAPLE @ 12" O.C.	TYP. FACENAIL
	8–16d COMMON, 12–3"x0.131" NAILS OR 12–3" 14 GAGE STAPLES	LAP SPLICE
BLOCKING BETWEEN JOISTS OR RAFTERS TO TOP PLATE	3–8d COMMON, 3–3"x0.131" NAILS OR 3–3" 14 GAGE STAPLES	TOENAIL
RIM JOIST TO TOP PLATE	8d @ 6" O.C., 3"x0131" NAIL @ 6" O.C. OR 3" 14 GAGE STAPLE @ 6" O.C.	TOENAIL
TOP PLATES, LAPS, INTERSECTIONS	2–16d COMMON, 3–3"x0.131" NAILS OR 3–3" 14 GAGE STAPLES	FACENAIL
CONTINUOUS HEADER, TWO PIECES	16d COMMON @ 16" O.C. ALONG EDGE	
CEILING JOIST TO PLATE	3–8d COMMON, 5–3"x0.131" NAILS OR 5–3" 14 GAGE STAPLES	TOENAIL
CONTINUOUS HEADER TO STUD	4–8d COMMON	TOENAIL
CEILING JOIST, LAPS OVER PARTITIONS (SEE SECTION AND TABLE 2308.10.4.1)	3–16d COMMON MIN., 4–3"x 0.131" NAILS OR 4–3" 14 GAGE STAPLES	FACENAIL
CEILING JOISTS TO PARALLEL RAFTERS (SEE SECTION AND TABLE 2308.10.4.1)	3–16d COMMON MIN., 4–3"x 0.131" NAILS OR 4–3" 14 GAGE STAPLES	FACENAIL
RAFTER TO PLATE (SEE SECTION AND TABLE 2308.10.1)	3–8d COMMON, 3–3"x0.131" NAILS OR 3–3" 14 GAGE STAPLES	TOENAIL
1" DIAGONAL BRACE TO EACH STUD & PLATE	2–8D COMMON, 2–3"x.0131" NAILS OR 3–3" 14 GAGE STAPLES	FACENAIL
1"x8" SHEATHING TO EACH BEARING	3–8d COMMON	FACENAIL
WIDER THAN 1"x8" SHEATHING TO EA. BEARING	3–8d COMMON	FACENAIL
BUILT–UP CORNER STUDS	16d COMMON @ 24" O.C., 3"x0.131" NAILS @ 16" O.C. OR 3–3" 14 GAGE STAPLES @ 16" O.C.	
BUILT–UP GIRDER AND BEAM	20d @ 32" O.C., 3–3"x0.131" NAIL @ 24" O.C. OR 3" 14 GAGE STAPLE @ 24" O.C.	FN @ T&B STAGGERED ON OPP. SIDES
	2–20d COMMON, 3–3"x0.131" NAILS OR 3–3" 14 GAGE STAPLES	FN @ ENDS & EA. SPLICE
2" PLANKS	16D COMMON @ EA. BEARING	
COLLAR TIE TO RAFTER	3–10D COMMON, 4–3"x0.131" NAILS OR 4–3" 14 GAGE STAPLES	FACENAIL
JACK RAFTER TO HIP	3–10d COMMON, 4–3"x0.131" NAILS OR 4–3" 14 GAGE STAPLES	TOENAIL
	2–10d COMMON, 3–3"x0.131" NAILS OR 3–3" 14 GAGE STAPLES	FACENAIL
ROOF RAFTER TO 2x RIDGE BEAM	2–16d COMMON, 3–3"x0.131" NAILS OR 3–3" 14 GAGE STAPLES	TOENAIL
	2–16d COMMON, 3–3"x0.131" NAILS OR 3–3" 14 GAGE STAPLES	FACENAIL
JOIST TO BAND JOIST	3–16d COMMON, 4–3"x0.131" NAILS OR 4–3" 14 GAGE STAPLES	FACENAIL
LEDGER STRIP	3–16d COMMON, 4–3"x0.131" NAILS OR 4–3" 14 GAGE STAPLES	FACENAIL
WOOD STRUCTURAL PANELS & PARTICLEBOARD SUBFLOOR, ROOF & WALL SHEATHING (TO FRAMING) 1/2" OR LESS = 6d, 2–3/8"x0.113" NAIL OR 1–3/4" 16 GAGE STAPLE @ 6" EDGE & 12" FIELD 19/32" TO 3/4" = 8d OR 6d, 2–3/8"x0.113" NAIL OR 2" 16 GAGE STAPLE @ 6" EDGE & 12" FIELD 7/8" TO 1" = 8d @ 6" EDGE & 12" FIELD 1–1/8" TO 1–1/4" = 10d OR 8d @ 6" EDGE & 12" FIELD SINGLE FLOOR (COMBINATION SUBFLOOR–UNDERLAYMENT TO FRAMING) 3/4" OR LESS = 6d @ 6" EDGE & 12" FIELD 7/8" TO 1" = 8d @ 6" EDGE & 12" FIELD 1–1/8" TO 1–1/4" = 10d OR 8d @ 6" EDGE & 12" FIELD		
PANEL SIDING (TO FRAMING)	1/2" OR LESS = 6d COMMON 5/8" = 8d COMMON	
FIBERBOARD SHEATHING 1/2" = NO. 11 GAGE ROOFING NAIL, 6d OR NO. 16 GAGE STAPLE 25/32" = NO. 11 GAGE ROOFING NAIL, 8d OR NO. 16 GAGE STAPLE (FASTENERS SPACED 3" O.C. EDGE, 6" O.C. FIELD WHEN USED AS STRUCT. SHEATHING. SPACING SHALL 6" O.C. EDGE AND 12" O.C. FIELD FOR NON–STRUCTURAL APPLICATIONS)		
INTERIOR PANELING	1/4" = 4d @ 6" O.C. EDGE, 12" O.C. FIELD 3/8" = 6d @ 6" O.C. EDGE, 12" O.C. FIELD	

SHEET: 18
OF: 27
DWN. BY: J.F.
REV. BY: R.M.
APP. BY: O.M.

LIBRARY EXPANSION PROJECT

FRAMING PLAN

IN THE CITY OF IMPERIAL, CALIFORNIA

DATE: 04/24/15

S4

SEAL:

BY: ROBERTO C. MARTINEZ
653 W. MAIN ST. SUITE 103
EL CENTRO, CA 92243
DATE: 4/24/2015
R.C.E. NO. C–74475

REVISIONS

NO.	DESCRIPTION:	DATE:	BY:
1			
2			
3			

City of Imperial California

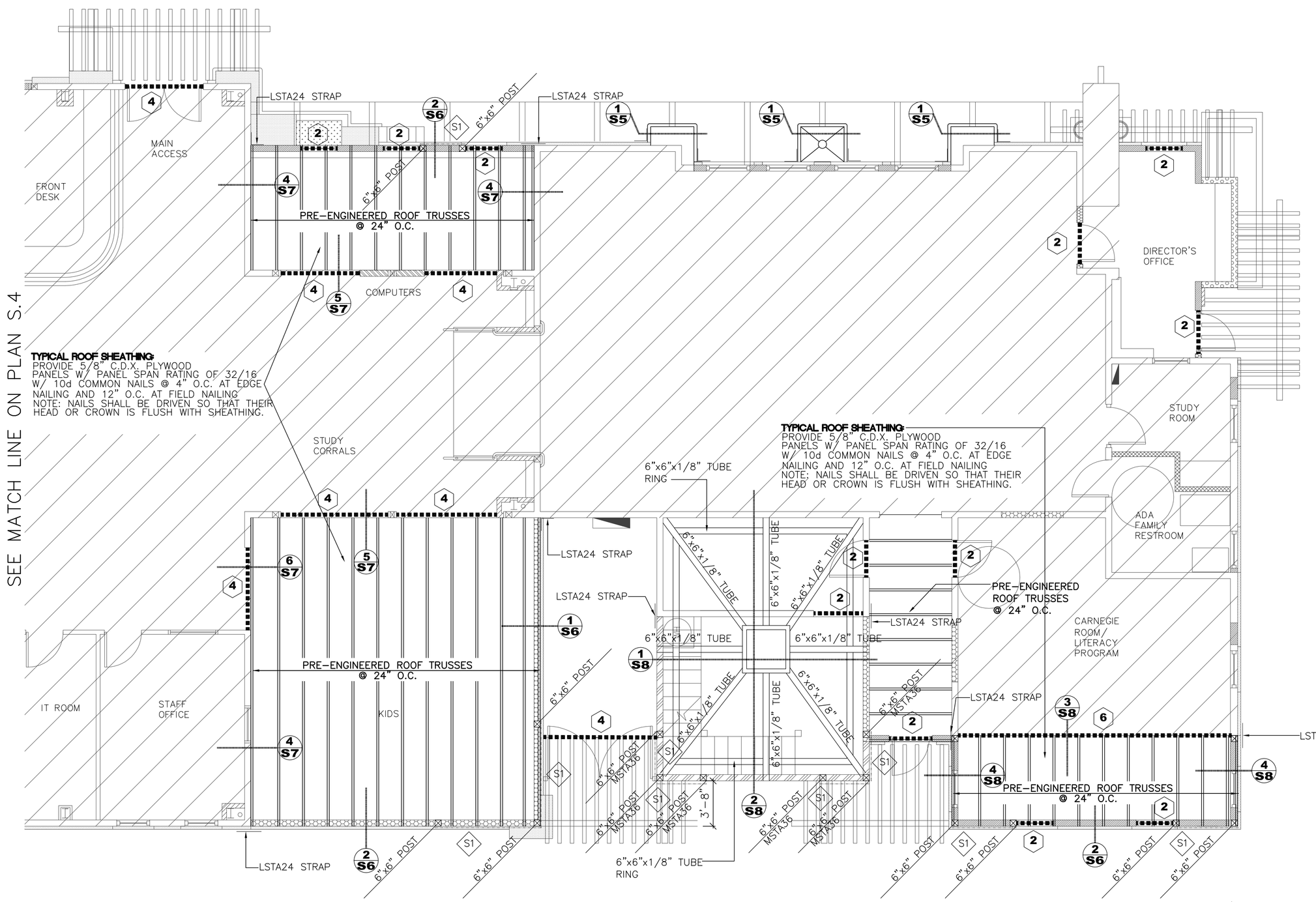

PARTIAL ROOF FRAMING PLAN

SCALE 3/16" = 1'-0"

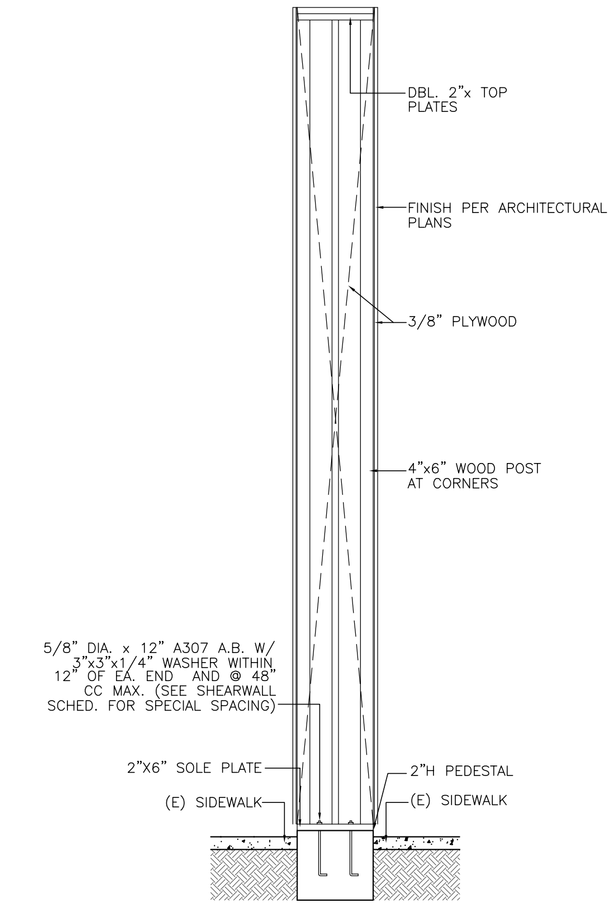

1 COL. ELEVATION

SCALE: 3/8"=1'-0"

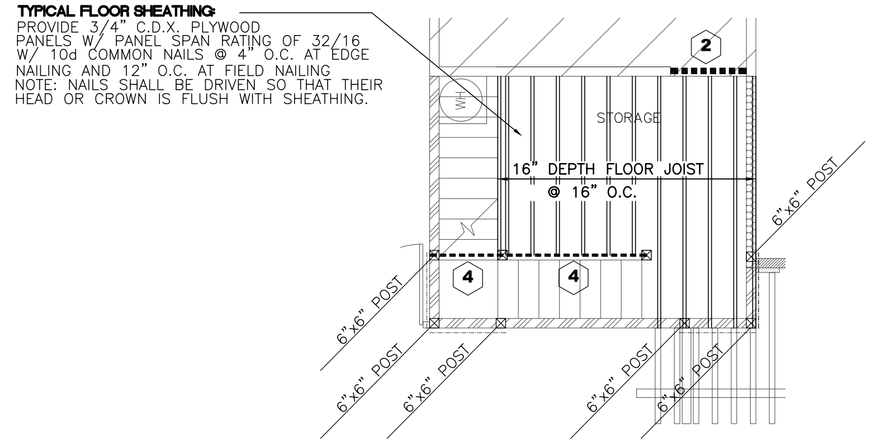

FLOOR FRAMING PLAN @ STORAGE

SCALE 3/16" = 1'-0"

SHEAR WALL SCHEDULE

SYMBOL	SHEAR WALL THICKNESS/ PANEL GRADE	SHEAR WALL LENGTH (FT)	SHEAR WALL EDGE NAILING (E.N)	END STUDS (PANEL JTS.) MIN., U.N.O.	5/8" DIA. (U.N.O.) ANCHOR BOLTS (3) (5)	SILL PLATE
S1	15/32" STRUC-1	6'-0"	8d AT 6" O.C.	2x DFL	32" O.C.	2x PTDF
S2	15/32" STRUC-1	6'-0"	8d AT 4" O.C.	3x DFL	24" O.C.	3x PTDF
S3	15/32" STRUC-1	8'-0"	8d AT 3" O.C. STAGGERED	3x DFL	24" O.C.	3x PTDF
S4	15/32" STRUC-1	12'-0"	10d AT 2" O.C. STAGGERED	4x DFL	16" O.C.	3x PTDF

NOTE:
1.- SHEAR WALL NAILING APPLIES TO STUDS TOP & BOTTOM PLATES & BLOCKING, U.N.O., FIELD NAILING FOR SHEATHING TO BE 10" O.C.
2.- USE COMMON WIRE NAILS, U.N.O.
3.- PROVIDE 8" MINIMUM EMBEDMENT FOR ANCHOR BOLTS
4.- ALL PANEL EDGES SHALL BE BLOCKED
5.- PROVIDE SQUARE STEEL PLATE WASHERS OF MINIMUM 3"x3" EACH WOOD PLATE OR SILL PLATE BOLT.

BEAM SCHEDULE

SYMBOL	BEAM SIZE
1	6"x8"
2	6"x6"
3	6"x8"
4	6"x10"
5	6"x6"
6	6"x14"

1.- SHEAR WALL NAILING APPLIES TO STUDS TOP & BOTTOM PLATES &

SHEET: 19
OF: 27
DWN. BY: J.F.
REV. BY: R.M.
APP. BY: O.M.

LIBRARY EXPANSION PROJECT

FRAMING PLAN

IN THE CITY OF IMPERIAL, CALIFORNIA | DATE: 02/05/15

S5

SEAL:

BY: ROBERTO C. MARTINEZ
653 W. MAIN ST. SUITE 103
EL CENTRO, CA 92243
DATE: 4/24/2015
R.C.E. NO. C-74475

REVISIONS

NO.	DESCRIPTION:	DATE:	BY:
1			
2			
3			

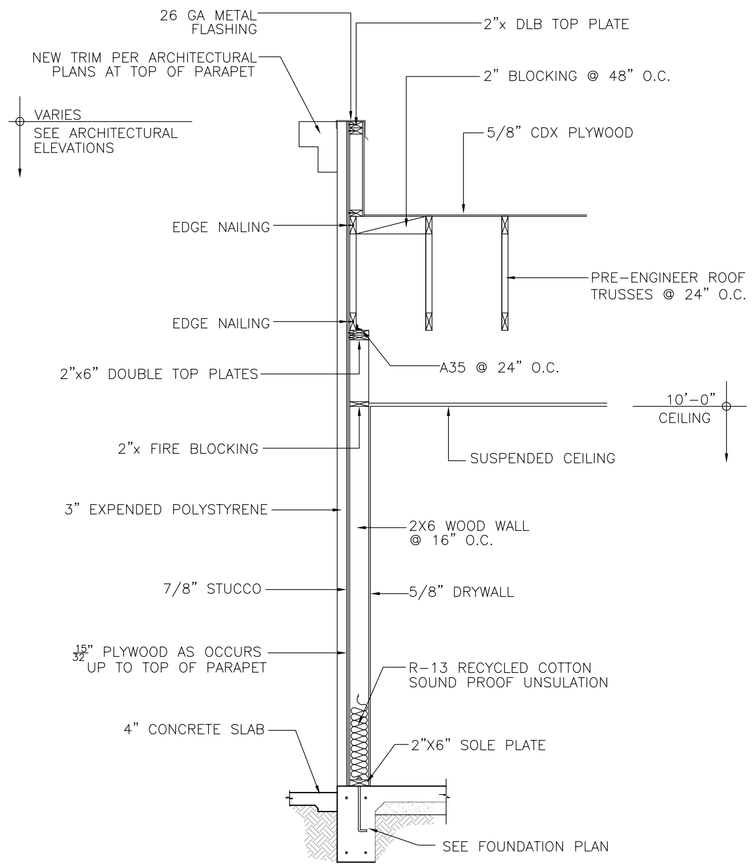

1 WALL SECTION
SCALE: 3/8"=1'-0"

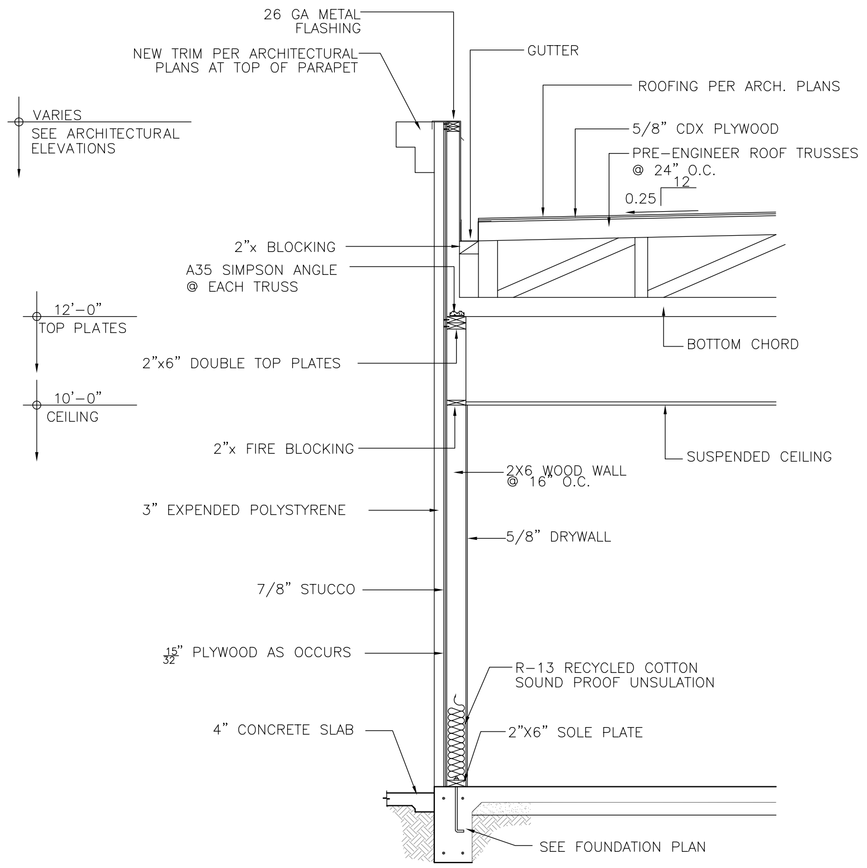

2 WALL SECTION
SCALE: 3/8"=1'-0"

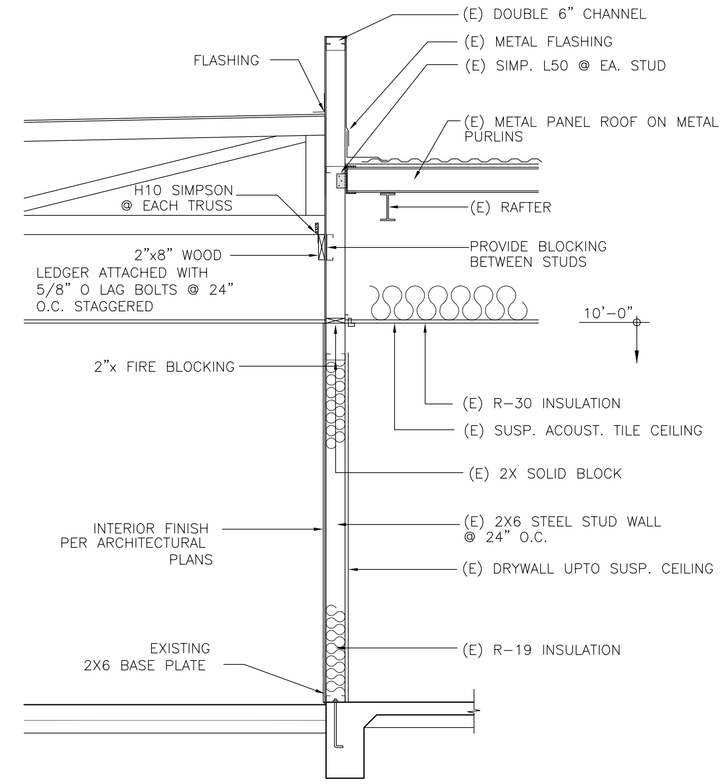

3 WALL SECTION
SCALE: 3/8"=1'-0"

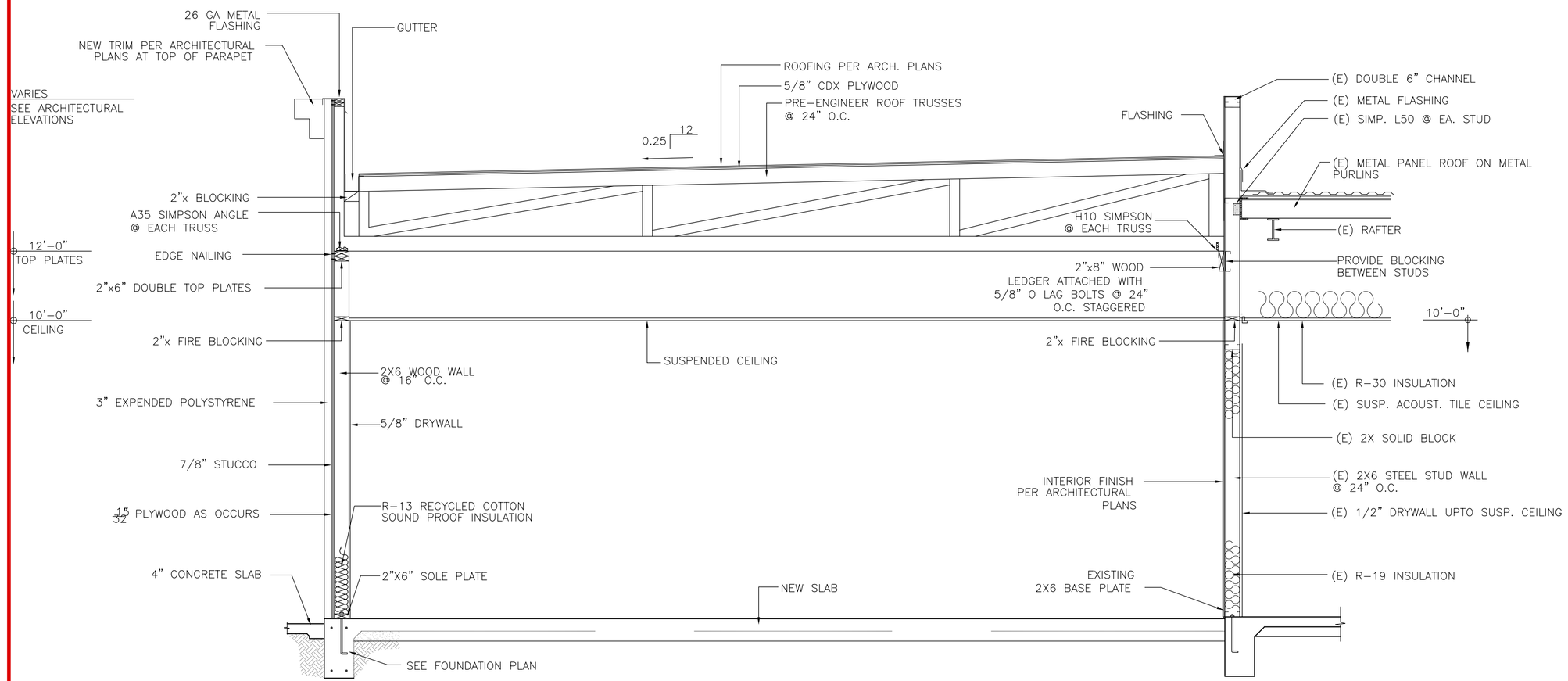

4 WALL SECTION
SCALE: 3/8"=1'-0"

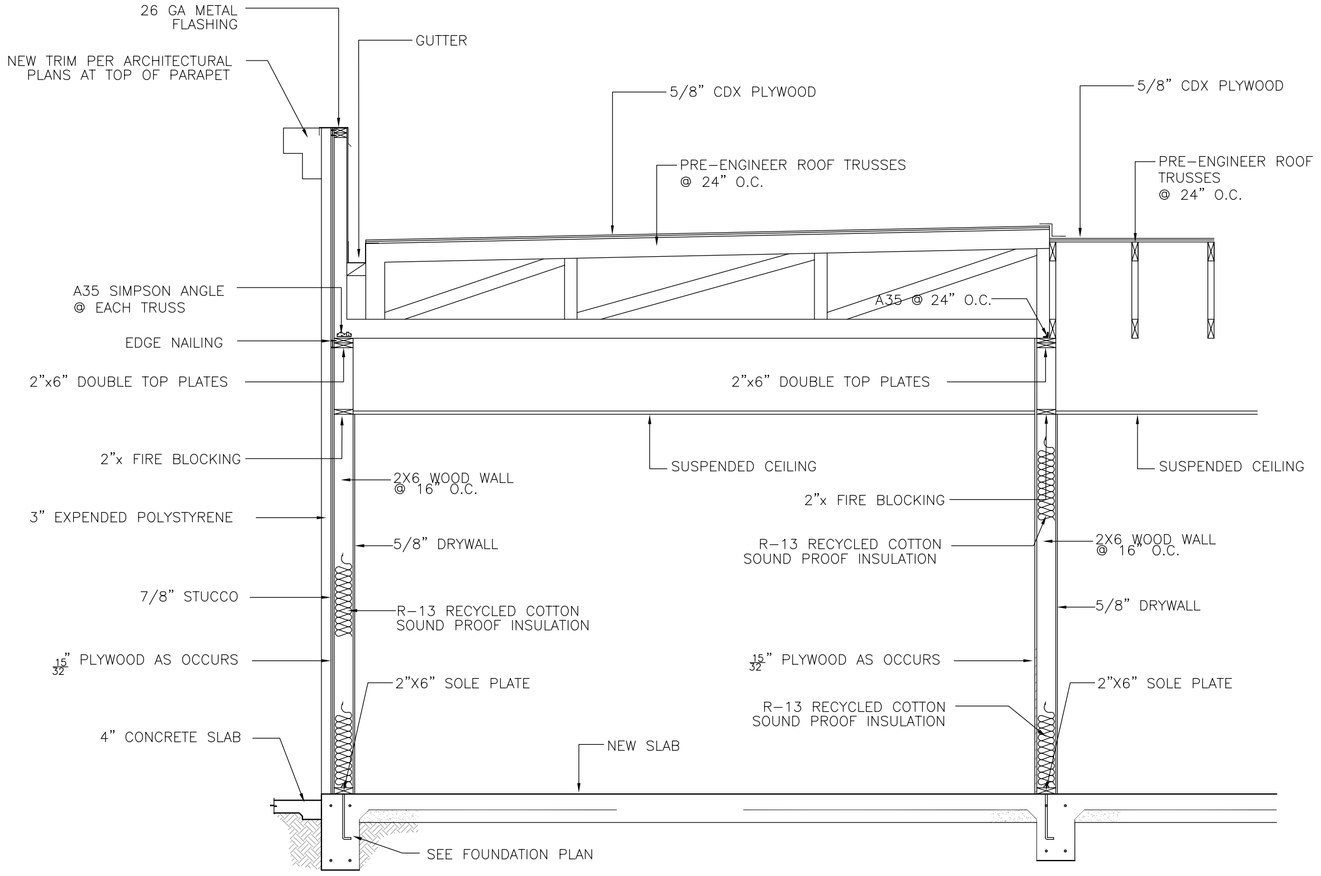

5 WALL SECTION
SCALE: 3/8"=1'-0"

NOTE:
SEE EXTERIOR AND INTERIOR FINISHES ON ARCHITECTURAL PLANS.

SHEET: 20 OF: 27
DWN. BY: J.F.
REV. BY: R.M.
APP. BY: O.M.

LIBRARY EXPANSION PROJECT

FRAMING PLAN

IN THE CITY OF IMPERIAL, CALIFORNIA

DATE: 02/05/15

S6

SEAL:

BY: ROBERTO C. MARTINEZ
653 W. MAIN ST. SUITE 103
EL CENTRO, CA 92243
DATE: 4/24/2015
R.C.E. NO. C-74475

REVISIONS

NO.	DESCRIPTION:	DATE:	BY:
1			
2			
3			

City of Imperial California

City of Imperial California

REVISIONS			
NO.	DESCRIPTION:	DATE:	BY:
△			
△			
△			

BY: ROBERTO C. MARTINEZ
653 W. MAIN ST. SUITE 103
EL CENTRO, CA 92243
DATE: 4/24/2015
R.C.E. NO. C-74475

SEAL: REGISTERED PROFESSIONAL ENGINEER — No. C-74475 — CIVIL — STATE OF CALIFORNIA

S7

LIBRARY EXPANSION PROJECT

FRAMING PLAN

IN THE CITY OF IMPERIAL, CALIFORNIA

DATE: 02/05/15

SHEET: 21
OF: 27

DWN. BY: J.F.
REV. BY: R.M.
APP. BY: O.M.

NOTE

SEE EXTERIOR AND INTERIOR FINISHES ON ARCHITECTURAL PLANS.

4 WALL SECTION
SCALE: 3/8"=1'-0"

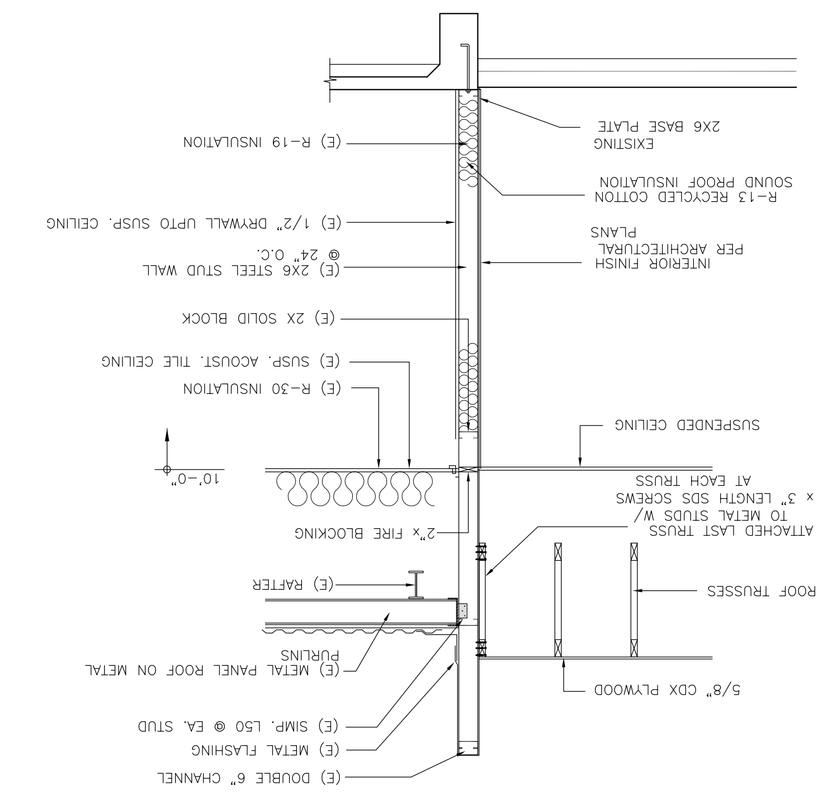

5 WALL SECTION
SCALE: 3/8"=1'-0"

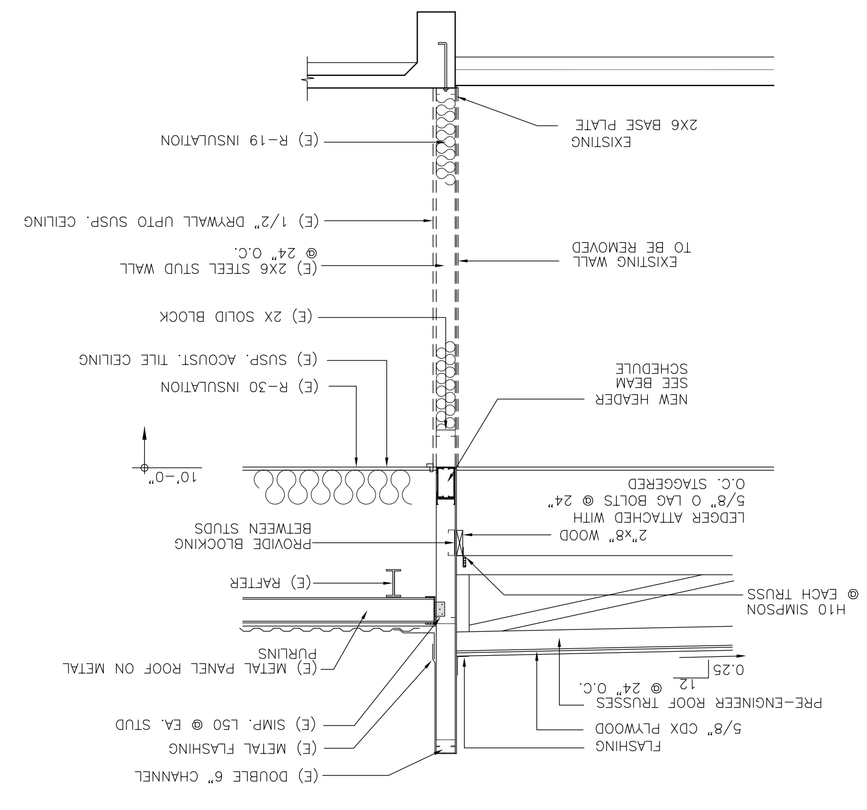

6 WALL SECTION
SCALE: 3/8"=1'-0"

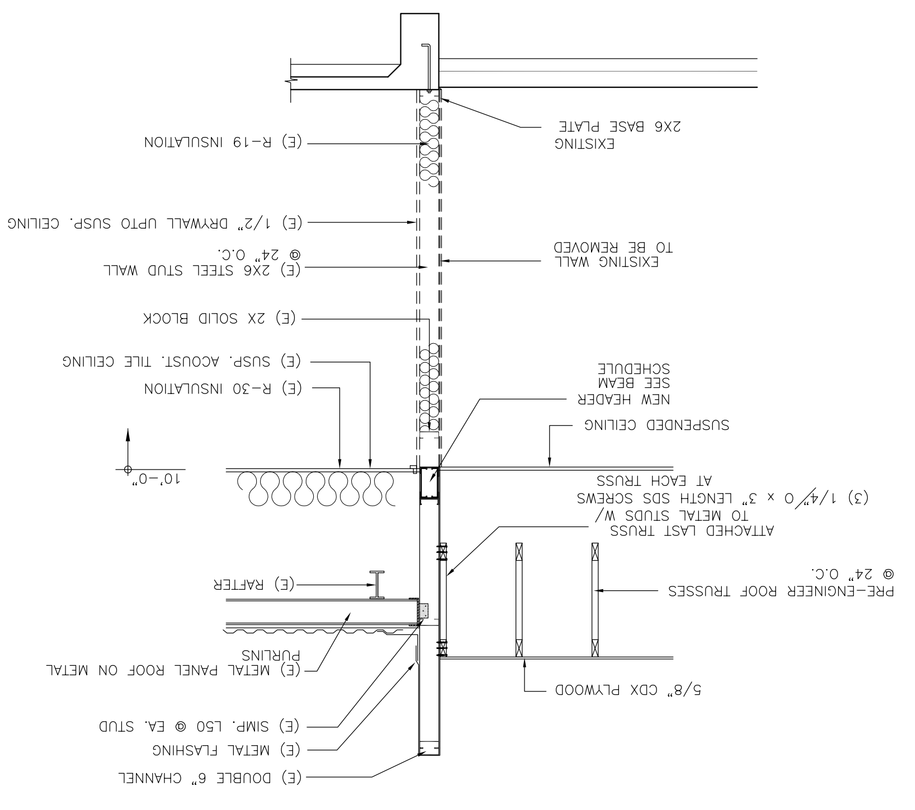

1 WALL SECTION
SCALE: 3/8"=1'-0"

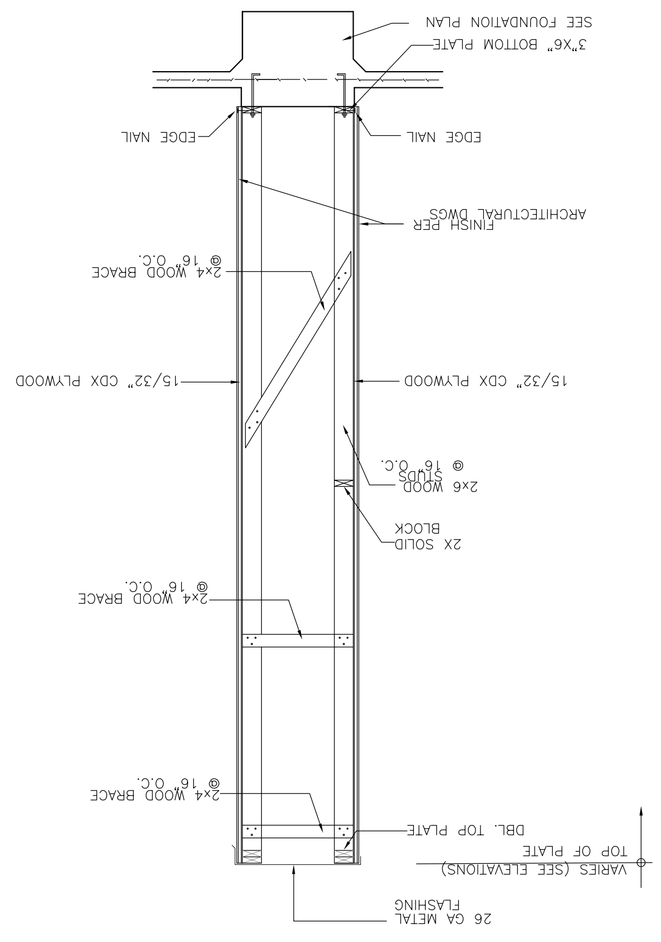

2 WALL SECTION
SCALE: 3/8"=1'-0"

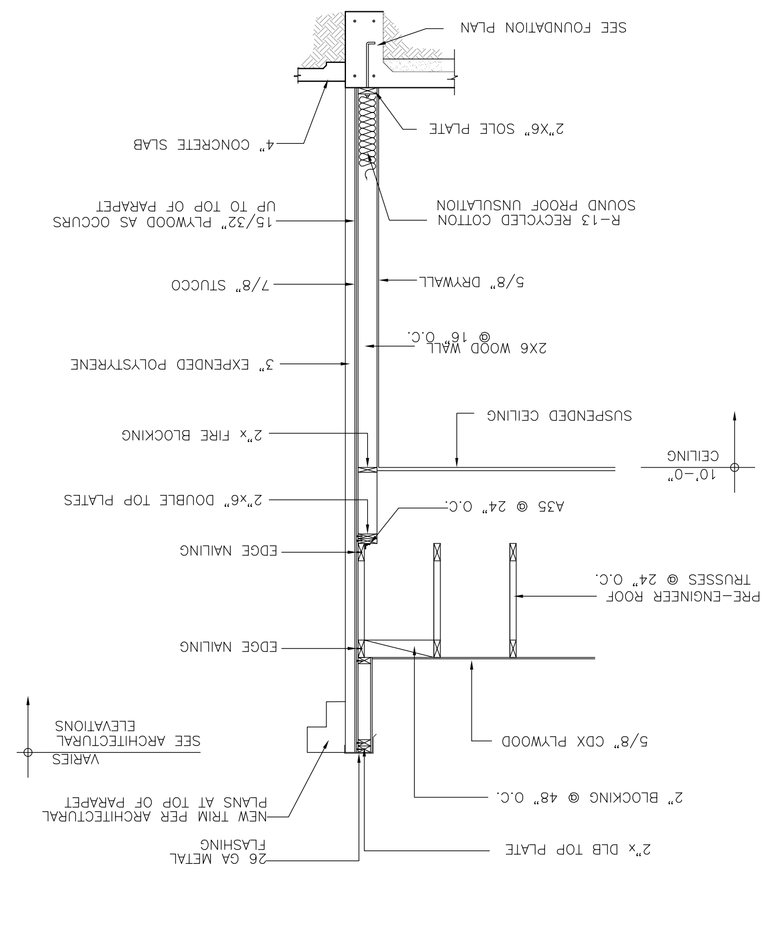

3 WALL SECTION
SCALE: 3/8"=1'-0"

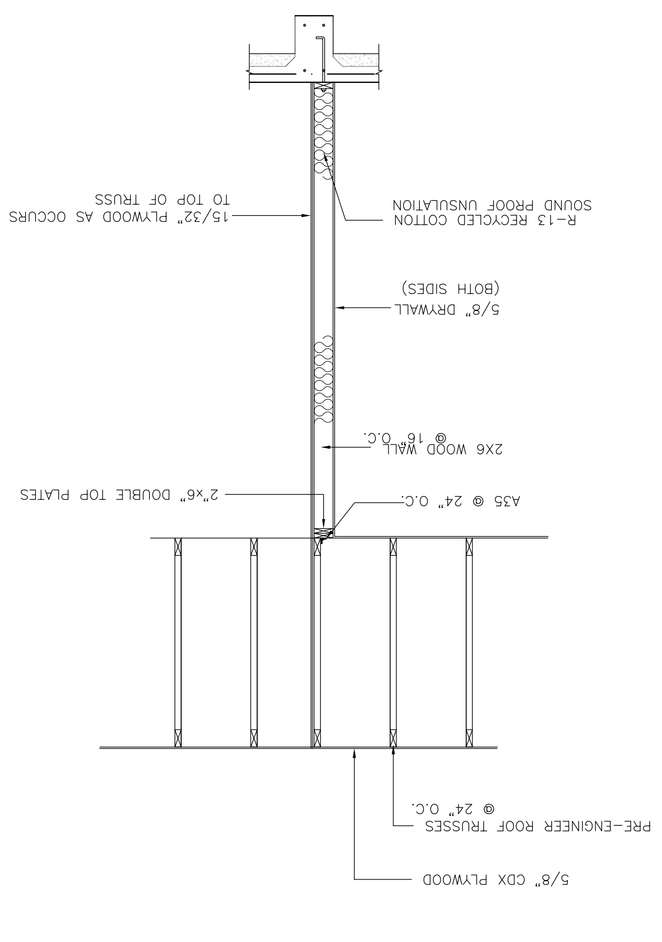

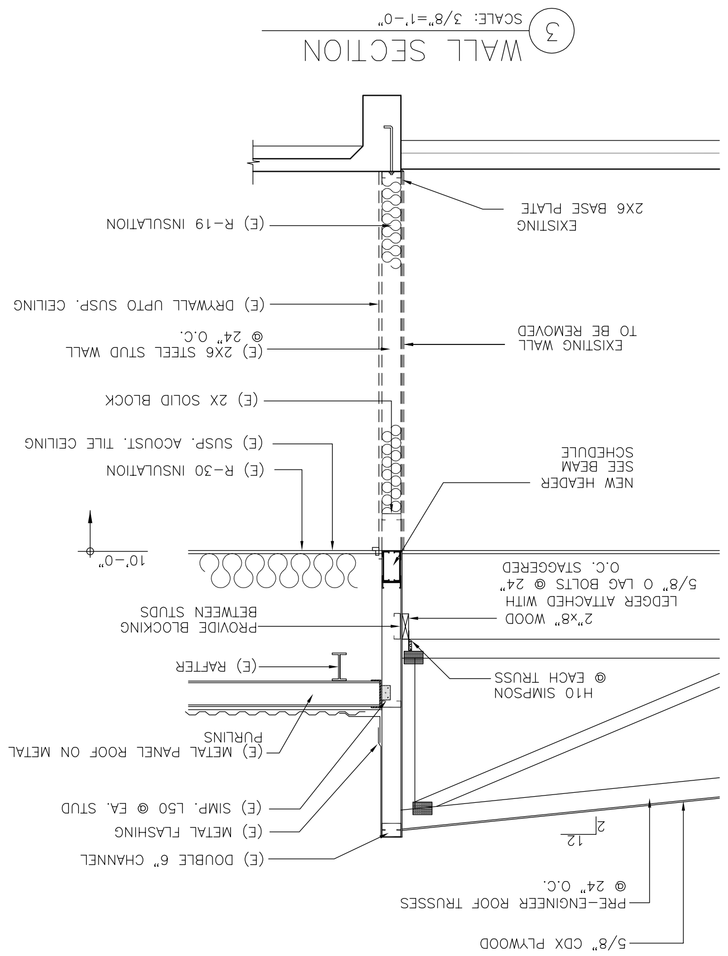

3 WALL SECTION

SCALE: 3/8"=1'-0"

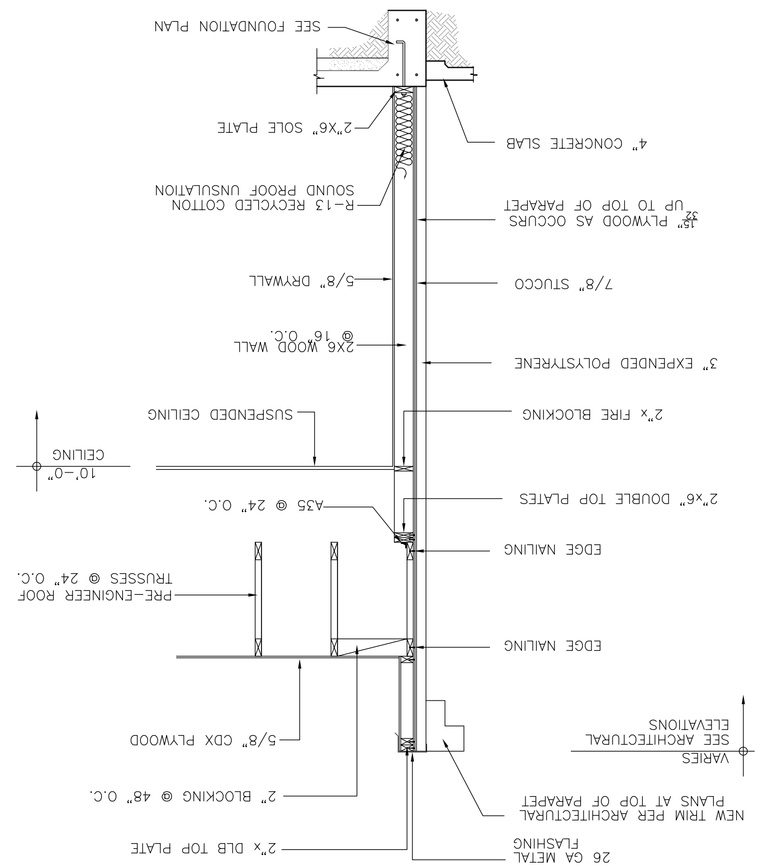

4 WALL SECTION

SCALE: 3/8"=1'-0"

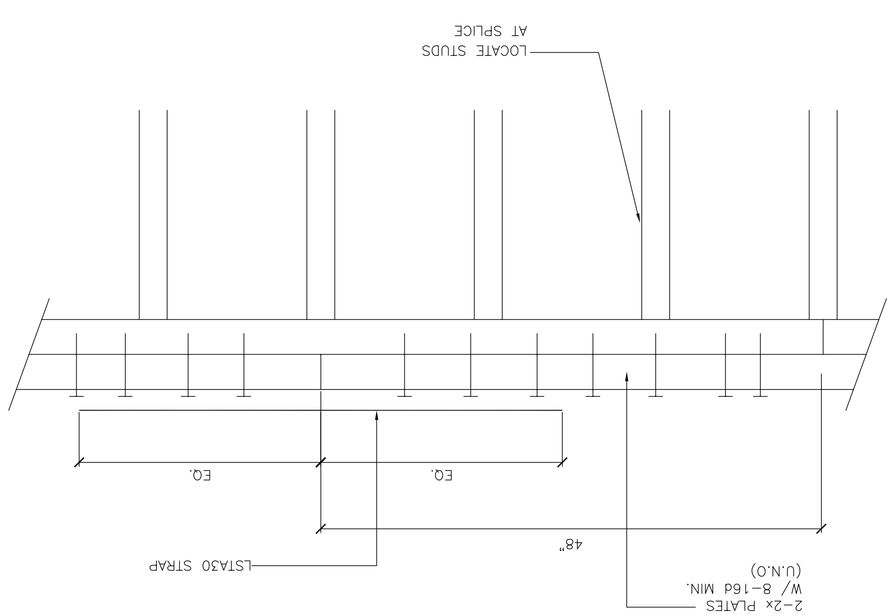

ELEVATION OF PLATE SPLICE (TYP)

NOT TO SCALE

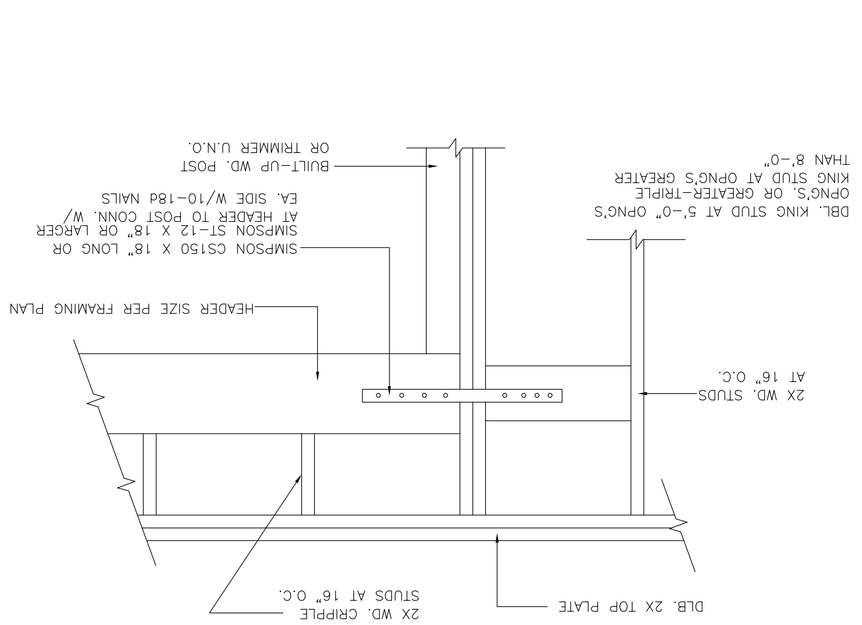

TYPICAL HEADER

NOT TO SCALE

NOTE

SEE EXTERIOR AND INTERIOR FINISHES ON ARCHITECTURAL PLANS.

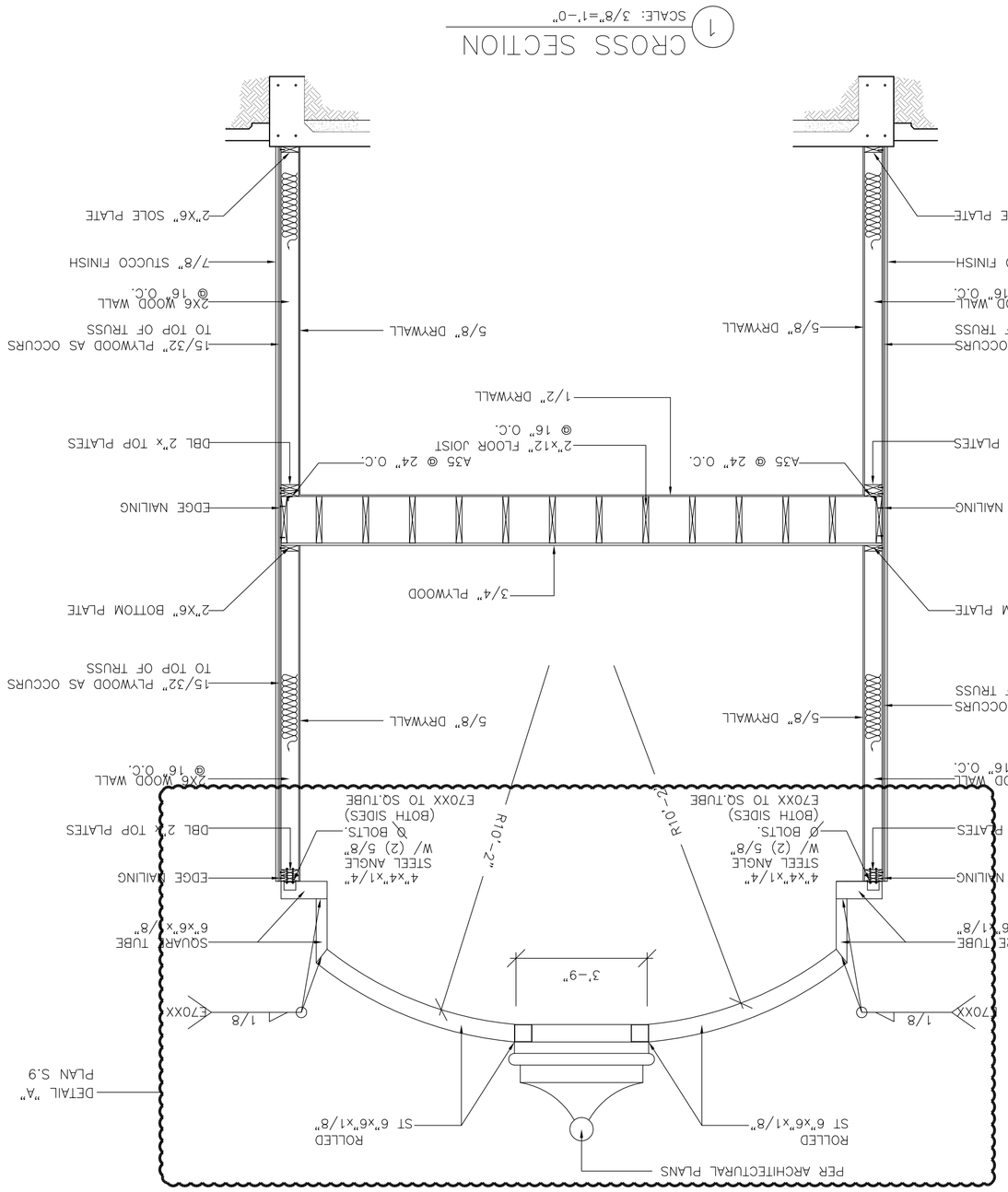

1 CROSS SECTION

SCALE: 3/8"=1'-0"

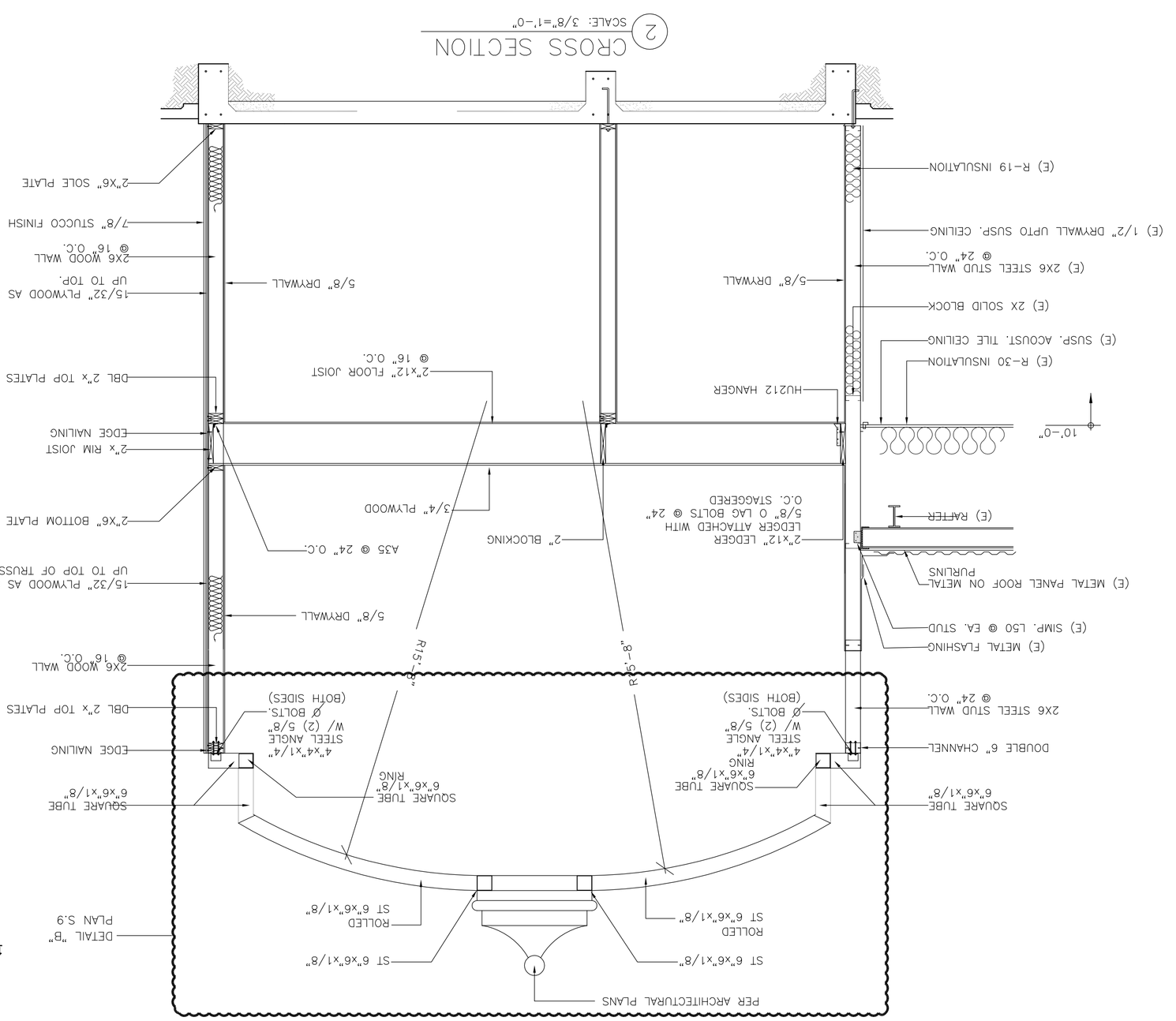

2 CROSS SECTION

SCALE: 3/8"=1'-0"

10 STRUCTURAL STEEL:

1.1 STRUCTURAL STEEL DESIGN, FABRICATION AND ERECTION SHALL CONFORM TO THE LATEST AISC SPECIFICATIONS.

1.2 ALL STRUCTURAL STEEL INCLUDING NUTS, BOLTS, FLOOR GRATING AND SHALL BE GALVANIZED COAT.

1.3 MATERIAL SPECIFICATIONS UNLESS NOTED OTHERWISE:
- A. STRUCTURAL SHAPES & PLATES- - - - -ASTM A36
- B. PIPE COLUMNS- - - - - - - - - - - - ASTM A53, GRADE B
- C. STEEL TUBES- - - - - - - - - - - - - ASTM A501
- D. HIGH STRENGTH BOLTS- - - - - - - - -ASTM A325

1.4 ALL BOLTS SHALL BE 3/4"ø A325-SC BOLTS, UNLESS NOTED OTHERWISE.

1.5 WELDING OF STRUCTURAL SHAPES AND PLATES SHALL BE IN CONFORMANCE WITH THE LATEST AMERICAN WELDING SOCIETY SPECIFICATION D1.1.

1.6 ALL WELDING SHALL BE PERFORMED BY LICENSED WELDERS.

BY:	ROBERTO C. MARTINEZ
	653 W. MAIN ST. SUITE 103
	EL CENTRO, CA 92243
DATE:	4/24/2015
R.C.E. NO.	C-74475

SEAL: REGISTERED PROFESSIONAL ENGINEER — ROBERTO C. MARTINEZ — No. C-74475 — CIVIL — STATE OF CALIFORNIA

NO.	DESCRIPTION:	DATE:	BY:
1			
2			
3			

REVISIONS

SHEET: 22 OF: 27

DWN. BY:	J.F.
REV. BY:	R.M.
APP. BY:	O.M.

DATE: 02/05/15

IN THE CITY OF IMPERIAL, CALIFORNIA

LIBRARY EXPANSION PROJECT

FRAMING PLAN

S8

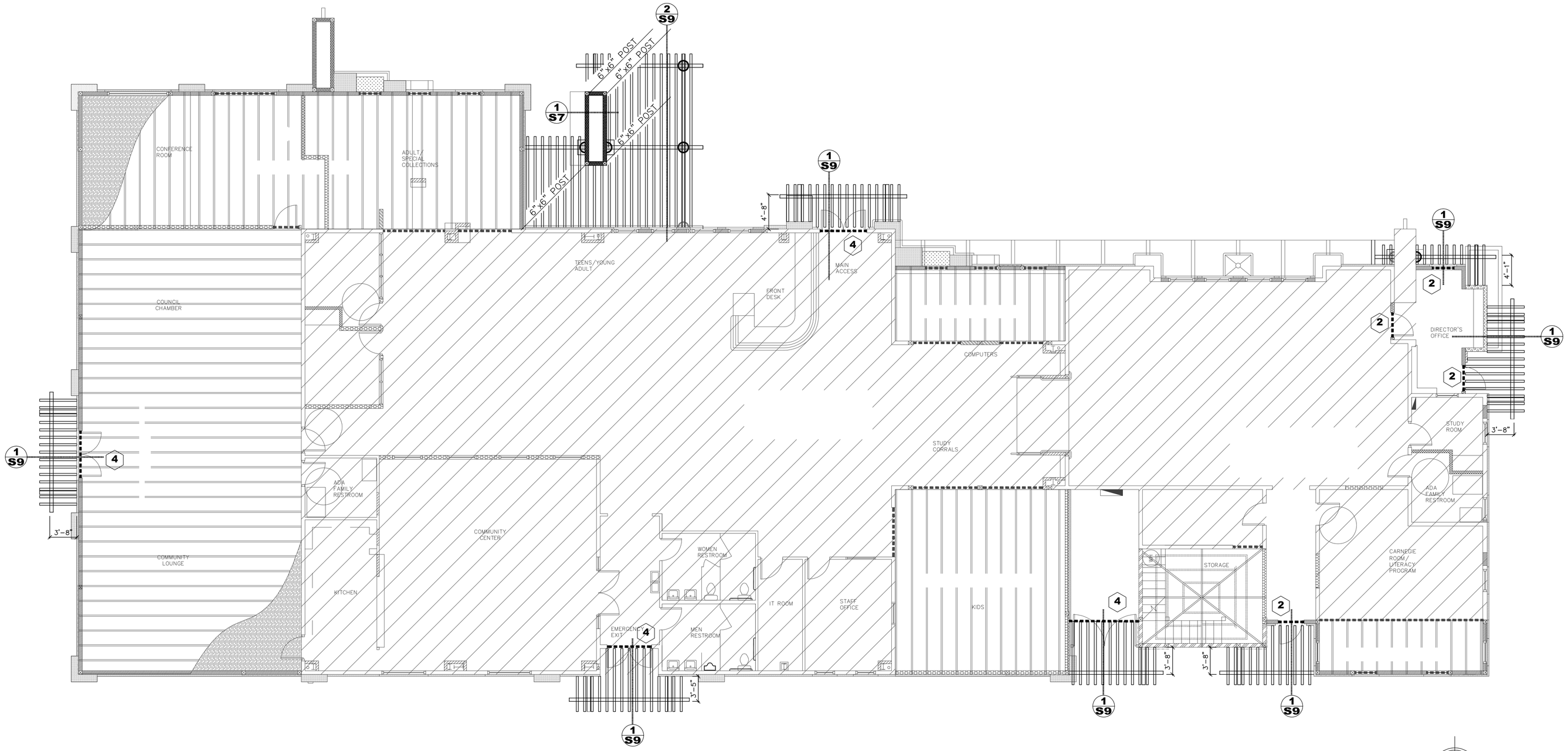

PERGOLAS FRAMING PLAN

2 SCALE 1/8" = 1'-0"

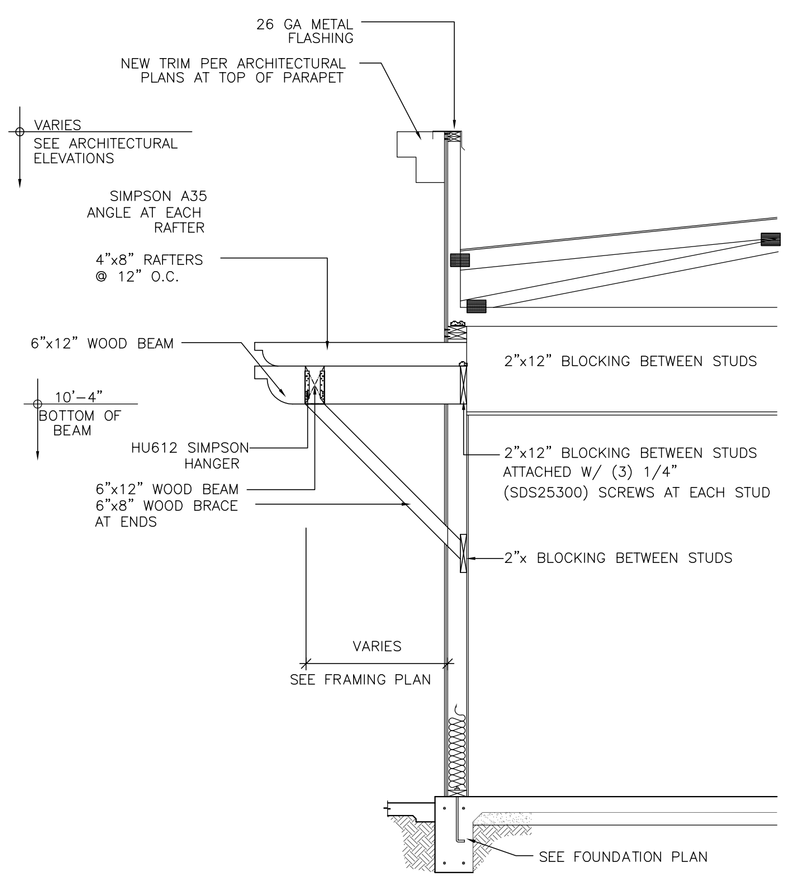

1 PERGOLA SECTION

SCALE: 3/8"=1'-0"

4

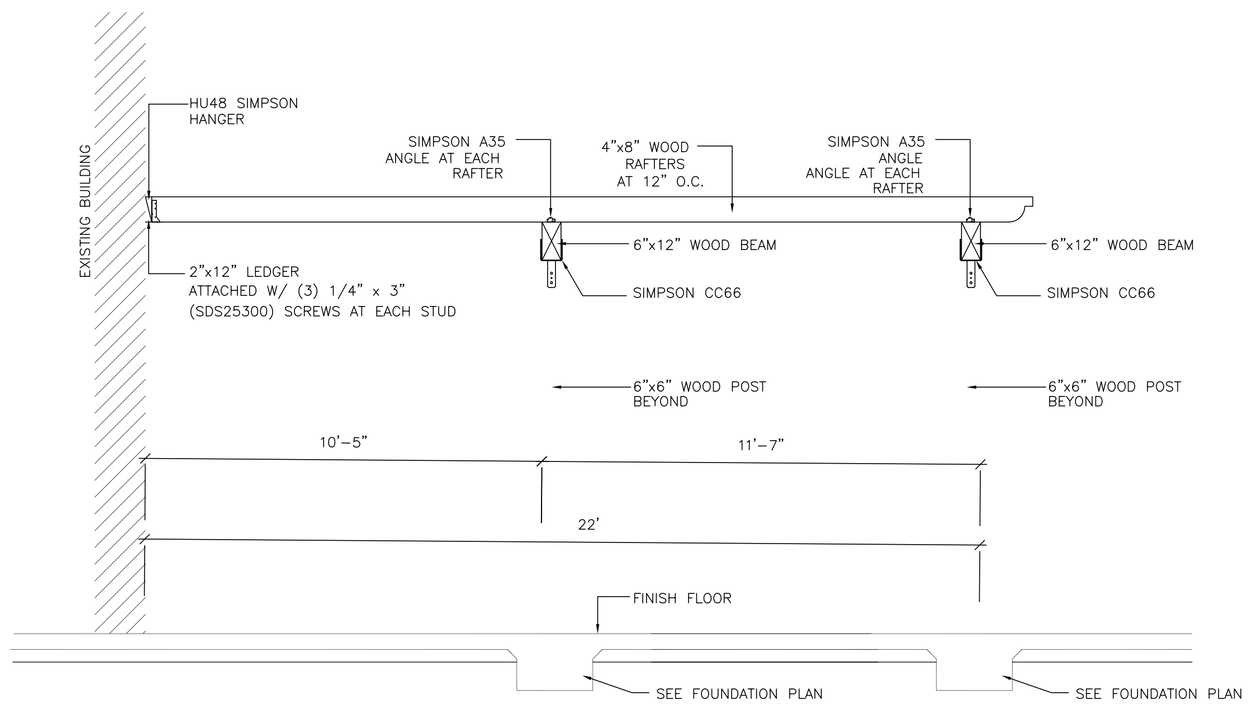

BEAM SCHEDULE	
SYMBOL	BEAM SIZE
1	6"x8"
2	6"x6"
3	6"x8"
4	6"x10"
5	6"x6"
6	6"x14"

NOTE:

SEE EXTERIOR AND INTERIOR FINISHES ON ARCHITECTURAL PLANS.

SHEET: 23
OF: 27
DWN. BY: J.F.
REV. BY: R.M.
APP. BY: O.M.

LIBRARY EXPANSION PROJECT

FRAMING PLAN

IN THE CITY OF IMPERIAL, CALIFORNIA | DATE: 02/05/15

S9

PROFESSIONAL ENGINEER * ROBERTO C. MARTINEZ * No. C-74475 * CIVIL * STATE OF CALIFORNIA

SEAL:

BY: ROBERTO C. MARTINEZ
653 W. MAIN ST. SUITE 103
EL CENTRO, CA 92243
DATE: 4/24/2015
R.C.E. NO. C-74475

REVISIONS

NO.	DESCRIPTION:	DATE:	BY:
1			
2			
3			

City of Imperial California

ELECTRICAL SYMBOLS LEGEND

Symbol	Description
	SUBPANEL
	2'x4' FT. LIGHT FIXTURE 4-F32T8 LAMPS, ELECTRONIC BALLAST 120V RECESSED MOUNT
EL	2'x4' FT. LIGHT FIXTURE 4-F32T8 LAMPS, ELECTRONIC BALLAST 120V RECESSED MOUNT W/BATTERY BACK UP
	CR24, 2'x4' FT. ARCHITECTURAL LED TRAFFER, WITH CREE SMARTCAST TECHNOLOGY 40W, 120V RECESSED MOUNT CREE OR SIMILAR
EL	CR24, 2'x4' FT. ARCHITECTURAL LED TRAFFER, WITH CREE SMARTCAST TECHNOLOGY 40W, 120V RECESSED MOUNT W/BATTERY BACK UP CREE OR SIMILAR
	CR24, 2'x4' FT. ARCHITECTURAL LED TRAFFER, WITH CREE SMARTCAST TECHNOLOGY 40W, 120V SURFACE MOUNT CREE OR SIMILAR
	CR22, 2'x2' FT. ARCHITECTURAL LED TROFFER, WITH CREE SMARTCAST TECHNOLOGY 32W, 120V RECESSED MOUNT CREE OR SIMILAR
EL	CR22, 2'x2' FT. ARCHITECTURAL LED TROFFER, WITH CREE SMARTCAST TECHNOLOGY 32W, 120V RECESSED MOUNT W/BATTERY BACKUP CREE OR SIMILAR
	CR22, 2'x2' FT. ARCHITECTURAL LED TROFFER, WITH CREE SMARTCAST TECHNOLOGY 32W, 120V SURFACE MOUNT CREE OR SIMILAR
	LED WALL MOUNT LIGHT FIXTURE 42W, 120V CREE OR SIMILAR
	WALL SCONCE LIGHT FIXTURE, 1-13DTT CFL, ELECTRONIC BALLAST, 120V LITHONIA LIGHTING OR SIMILAR
	CFL DOWNLIGHTING FIXTURE, 1-13DTT CFL, ELECTRONIC BALLAST, 120V LITHONIA LIGHTING OR SIMILAR
	LED DOWNLIGHT FIXTURE 10W, 120V HOUSING 4" CREE OR SIMILAR
	FLOOR SPOT CAT. PDX7 B 12LED CLW MVOLT SP FLCAS 34S LP1 LITHONIA LIGHTING OR SIMILAR
	GARDEN FIXTURE/REFLECTOR CAT. TL4012DLV S F DB W BRONZELITE OR SIMILAR
	OUTDOOR EGRESS EMERGENCY LIGHT 20W,
RPS	REMOTE POWER SUPPLY INPUT 120/277 VCA, OUTPUT 5-24V
EXIT	WALL MOUNTED EXIT LIGHT/SIGN W/ BATTERY BACK-UP
	SINGLE RECEPTACLE OUTLET, 50A, 240V
	DUPLEX RECEPTACLE OUTLET, 20A, 120V
GFCI	DUPLEX RECEPTACLE OUTLET, 20A, 120V WITH GROUND FAULT CIRCUIT INTERRUPTER (GFCI)
	TWO DUPLEX RECEPTACLE OUTLET, 20A, 120V
J	JUNCTION-BOX
	MAIN CIRCUIT BREAKER & DISTRIBUTION PANEL
M	METER SOCKET
	GROUNDING ELECTRODE
T	THERMOSTAT
DOWN	CONDUIT/PREPARATION
	TV/CABLE/DATA OUTLET
	MICROPHONE OUTLET
	VOICE & DATA JACK
	PROJECTOR
	EMT CONDUIT
	PVC SCH 40 CONDUIT INSTALLED UNDERGROUND
	SAFETY SWITCH 3P-60A, 240 V, NEMA 3R
	SAFETY SWITCH 3P-30A, 240 V, NEMA 3R
	SAFETY SWITCH 2P-30A, 240 V, NEMA 3R
	EMT CONDUIT AND WIRE HOME RUN TO DESIGNATED CIRCUIT
$	SINGLE POLE SWITCH, 15A, 120V
$2	DOUBLE POLE SWITCH, 15A, 120V
	VENTILATION FAN 80 CFM, 0.3 SONES, 0.4A. 120 V. CAT. QTXE080, BROAN OR SIMILAR

"C" SUBPANEL 3 PHASE, 4W, 225A, 42 CKTS. 120/240V CAT. QO342L225G SQUARE D (OR SIMILAR), FLUSH MOUNT.

CKT.	PHASE	ITEM QTY	DESCRIPTION	VA	AMPS	PROT	VA/A/PHASE A	VA/A/PHASE B	VA/A/PHASE C	PROT	AMPS	VA	DESCRIPTION	ITEM QTY	PHASE	CKT.
1	A	2	WATER DISPENSER & SODA MACHINE	1080	9.0	1P-20	4660 / 36.0			3P/40	27.0	3580	A/C EQUIPMENT #1 COMMUNITY LOUNGE	1	A	2
3	B							3580 / 27.0			27.0	3580			B	4
5	C	1	REFRIGERATOR RECEPTACLE OUTLET	780	6.5	1P-20			4360 / 33.5		27.0	3580			C	6
7	A	4	KITCHEN RECEPTACLE OUTLET	720	6.0	1P-20	4300 / 33.0			3P/40	27.0	3580	A/C EQUIPMENT #2 COUNCIL CHAMBER	1	A	8
9	B							3580 / 27.0			27.0	3580			B	10
11	C	1	MICROWAVE OVEN	1500	12.5	1P-20			5080 / 39.5		27.0	3580			C	12
13	A	1	KITCHEN COFFE MAKER	1600	13.5	1P-20	2196 / 18.5			1P-20	5.0	596	STUDY ROOM & ADULT SPECIAL COLLECTIONS LIGHTS	18	A	14
15	B														B	16
17	C	3	COMMUNITY CENTER RECEPTACLE OUTLETS	540	4.5	1P-20			1540 / 13.0	1P-20	8.3	1000	COMMUNITY CENTER LIGHTS	19	C	18
19	A	9	COMMUNITY LOUNGE RECEPTACLE OUTLETS	1620	13.5	1P-20	1330 / 19.4			1P-20	5.9	710	COMMUNITY LOUNGE LIGHTS	24	A	20
21	B														B	22
23	C	10	COMMUNITY LOUNGE RECEPTACLE OUTLETS	1800	15.0	1P-20			2222 / 18.5	1P-20	3.5	422	CONFERENCE ROOM LIGHTS	14	C	24
25	A	8	COMMUNITY LOUNGE RECEPTACLE OUTLETS	1440	12.0	1P-20	3040 / 25.5			1P-20	13.5	1600	CONFERENCE ROOM COFFE MAKER	1	A	26
27	B							4550 / 37.0		2P/50	37.0	4450	STOVE	1	B	28
29	C	6	COUNCIL CHAMBER RECEPTACLE OUTLETS	1080	9.0	1P-20			5530 / 46.0		37.0	4450			C	30
31	A	6	COUNCIL CHAMBER RECEPTACLE OUTLETS	1080	9.0	1P-20	1080 / 9.0								A	32
33	B														B	34
35	C	4	COUNCIL CHAMBER RECEPTACLE OUTLETS	720	6.0	1P-20			720 / 6.0						C	36
37	A	4	CONFERENCE ROOM RECEPTACLE OUTLETS	720	6.0	1P-20	720 / 6.0								A	38
39	B														B	40
41	C	5	CONFERENCE ROOM RECEPTACLE OUTLETS	900	7.5	1P-20			900 / 7.5						C	42
			TOTAL VA/PHASE				17326	11710	20354							
			TOTAL AMPERS/PHASE				147.4	91.0	164.0							

"D" SUBPANEL 3 PHASE, 4 W, 120-240V, 225A, 42 CKTS CAT. QO342L225G, SQUARE D (OR SIMILAR), FLUSH MOUNT.

CKT.	PHASE	ITEM QTY	DESCRIPTION	VA	AMPS.	PROT.	VA/A/PHASE A	VA/A/PHASE B	VA/A/PHASE C	PROT.	AMPS.	VA	DESCRIPTION	ITEM QTY	PHASE	CKT.
1	A		EXISTING LIGHTING LOAD			1P-20				1P-20			EXISTING LIGHTING LOAD		A	2
3	B														B	4
5	C		EXISTING LIGHTING LOAD			1P-20				1P-20			EXISTING LIGHTING LOAD		C	6
7	A		EXISTING LIGHTING LOAD			1P-20				1P-20			EXISTING LIGHTING LOAD		A	8
9	B														B	10
11	C		EXISTING LIGHTING LOAD			1P-20				1P-20			EXISTING LIGHTING LOAD		C	12
13	A		EXISTING LIGHTING LOAD			1P-20				1P-20			EXISTING LIGHTING LOAD		A	14
15	B														B	16
17	C	16	KIDS AND COMPUTER AREAS LIGHTS	566	4.7	1P-20			1646 / 13.7	1P-20	9.0	1080	COMPUTER'S AREA RECEPTACLE OUTLETS	6	C	18
19	A						1080 / 9.0			1P-20	9.0	1080	STUDY CORRALS RECEPTACLE OUTLETS	6	A	20
21	B														B	22
23	C								1080 / 9.0	1P-20	9.0	1080	COMPUTER'S AREA RECEPTACLE OUTLETS	6	C	24
25	A						1440 / 12.0			1P-20	12.0	1440	COMPUTER'S AREA RECEPTACLE OUTLETS	8	A	26
27	B														B	28
29	C								1260 / 10.5	1P-20	10.5	1260	KIDS AREA RECEPTACLE OUTLETS	7	C	30
31	A						1440 / 12.0			1P-20	12.0	1440	STUDY CORRAL RECEPTACLE OUTLETS	8	A	32
33	B														B	34
35	C								1080 / 9.0	1P-20	9.0	1080	STUDY ROOM RECEPTACLE OUTLETS	6	C	36
37	A						540 / 4.5			1P-20	4.5	540	IT ROOM RECEPTACLE OUTLETS	3	A	38
39	B														B	40
41	C														C	42
			TOTAL VA/PHASE				4500		5046							
			TOTAL AMPERS/PHASE				37.5		42.1							

"E" SUBPANEL 3 PHASE, 4 W, 120-240V, 225A, 42 CKTS CAT. QO342L225G, SQUARE D (OR SIMILAR), FLUSH MOUNT.

CKT	PHASE	ITEM QTY	DESCRIPTION	VA	AMPS.	PROT.	VA/A/PHASE A	VA/A/PHASE B	VA/A/PHASE C	PROT.	AMPS.	VA	DESCRIPTION	ITEM QTY	PHASE	CKT.
1	A		EXISTING LIGHTING LOAD			1P-20				1P-20			EXISTING LIGHTING LOAD		A	2
3	B														B	4
5	C		EXISTING LIGHTING LOAD			1P-20				1P-20			EXISTING LIGHTING LOAD		C	6
7	A		EXISTING LIGHTING LOAD			1P-20				1P-20			EXISTING LIGHTING LOAD		A	8
9	B														B	10
11	C		EXISTING LIGHTING LOAD			1P-20				1P-20			EXISTING LIGHTING LOAD		C	12
13	A		EXISTING LIGHTING LOAD			1P-20				1P-20			EXISTING LIGHTING LOAD		A	14
15	B														B	16
17	C		EXISTING LIGHTING LOAD			1P-20				1P-20			EXISTING LIGHTING LOAD		C	18
19	A		EXISTING LIGHTING LOAD			1P-20				1P-20			EXISTING LIGHTING LOAD		A	20
21	B														B	22
23	C	20	CARNEGIE STUDY ROOMS AND DIRECTOR'S OFFICE LIGHTS	550	4.6	1P-20			1450 / 12.1	1P-20	7.5	900	RECEPTACLE OUTLETS DIRECTOR'S OFFICE	5	C	24
25	A					1P-20	720 / 6.5			1P-20	6.5	720	STUDY, RESTROM RECEPTACLE OUTLETS	4	A	26
27	B														B	28
29	C								1260 / 10.5	1P-20	10.5	1260	CARNEGIE ROOM RECEPTACLE OUTLETS	7	C	30
31	A						360 / 3.0			1P-20	3.0	360	STORAGE RECEPTACLE OUTLETS	2	A	32
33	B														B	34
35	C														C	36
37	A														A	38
39	B														B	40
41	C														C	42
			TOTAL VA/PHASE													
			TOTAL AMPERS/PHASE													

ELECTRICAL NOTES

1. ALL WORK TO BE DONE ACCORDING WITH CALIFORNIA ELECTRICAL CODE 2013 EDITION.
2. EXISTING A/C UNITS, MOUNTED ON ROOF
3. NEW A/C UNITS, MOUNTED ON ROOF
4. RUN ONE 1/2" EMT CONDUIT FOR THE THERMOSTATS
5. EMT CONDUIT, RUN UNDER THE ROOF INSIDE THE BUILDING
6. EXTERIOR LIGHT FIXTURE CONTROL
   CIRCUIT B18 – TIMER
   CIRCUIT B20 – PHOTOCELL & RELAY
   INSTALL THE TIMER & THE LIGHTING RELAY IN AN ENCLOSURE NEXT TO THE SUBPANEL "B"
7. REPLACE TWO EXISTING SUBPANELS IN STUDY ROOM AREA, FOR A NEW SUBPANEL OF 42 CKTS. THREE PHASE, 120–240V, 225A, CAT. QO342L225G SQUARE D (OR SIMILAR)
8. REPLACE THE EXISTING SUBPANEL ("B") FOR A NEW SUBPANEL OF 42 CKTS. THREE PHASE, 120–240V, 225A CAT. QO342L225GRB SQUARE D (OR SIMILAR)
9. MOVE WIRING FOR THE EXISTING KITCHEN APPLIANCES FROM THE EXISTING SUBPANEL "D" TO THE NEW SUBPANEL "C"
10. PHASE B IS THE HIGH LEG. AND SHALL BE DURABLY AND PERMANENTLY MARKED BY AN OUTER FINISH THAT IS ORANGE IN COLOR, OR BY OTHER EFFECTIVE MEANS.
11. CHANGE THE RATING PLUG IN THE EXISTING MAIN CIRCUIT BREAKER, TO UPGRADE IT, FROM 3P–400A TO 3P–600A. MAIN CIRCUIT BREAKER FRAME CATALOG NUMBER SGHA36AT0600, GE. NEW RATING PLUG CATALOG NUMBER SRPG600A600, GE
12. CONNECT TO THE GENERAL LIGHTING AREA CIRCUITS THE CORRIDOR LIGHTS (2), EXIT SIGNS (2) & OUTDOOR EGRESS LIGHT
13. VERIFY THE RESISTANCE TO GROUND IT IS NOT MORE THAN 25 OHMS ANYTIME, USE SUPLEMENTAL ELECTRODES (METAL WATER PIPE, CONCRETE–ENCASED ELECTRODE OR METAL FRAME OF BUILDING) TO REDUCE RESISTENCE TO GROUND.

FOR REFERENCE ONLY

City of Imperial California

REVISIONS			
NO.	DESCRIPTION:	DATE:	BY:
△			
△			
△			

BY:
DATE:
XXXXXX
R.C.E. NO. XXXXX

SEAL: REGISTERED PROFESSIONAL ENGINEER JOSE LUIS REYES LEMUS E 15446 ELECTRICAL STATE OF CALIFORNIA

E01

LIBRARY EXPANSION PROJECT

POWER PLAN

IN THE CITY OF IMPERIAL, CALIFORNIA — DATE: 05/13/15

SHEET: 1 OF: 4
DWN. BY: L.A.R.
REV. BY: R.L.
APP. BY: R.L.

ELECTRICAL SYMBOLS LEGEND

	SUBPANEL
	2'x4' FT, LIGHT FIXTURE 4-F32T8 LAMPS, ELECTRONIC BALLAST 120V RECESSED MOUNT
EL	2'x4' FT, LIGHT FIXTURE 4-F32T8 LAMPS, ELECTRONIC BALLAST 120V RECESSED MOUNT W/BATTERY BACK UP
	CR24, 2'x4' FT, ARCHITECTURAL LED TRAFFER, WITH CREE SMARTCAST TECHNOLOGY 40W, 120V RECESSED MOUNT CREE OR SIMILAR
EL	CR24, 2'x4' FT, ARCHITECTURAL LED TRAFFER, WITH CREE SMARTCAST TECHNOLOGY 40W, 120V RECESSED MOUNT W/BATTERY BACK UP CREE OR SIMILAR
	CR24, 2'x4' FT, ARCHITECTURAL LED TRAFFER, WITH CREE SMARTCAST TECHNOLOGY 40W, 120V SURFACE MOUNT CREE OR SIMILAR
	CR22, 2'x2' FT, ARCHITECTURAL LED TROFFER, WITH CREE SMARTCAST TECHNOLOGY 32W, 120V RECESSED MOUNT CREE OR SIMILAR
EL	CR22, 2'x2' FT, ARCHITECTURAL LED TROFFER, WITH CREE SMARTCAST TECHNOLOGY 32W, 120V RECESSED MOUNT W/BATTERY BACKUP CREE OR SIMILAR
	CR22, 2'x2' FT, ARCHITECTURAL LED TROFFER, WITH CREE SMARTCAST TECHNOLOGY 32W, 120V SURFACE MOUNT CREE OR SIMILAR
	LED WALL MOUNT LIGHT FIXTURE 42W, 120V CREE OR SIMILAR
	WALL SCONCE LIGHT FIXTURE, 1-13ITT CFL, ELECTRONIC BALLAST, 120V LITHONIA LIGHTING OR SIMILAR
	CFL DOWNLIGHTING FIXTURE, 1-13DTT CFL, ELECTRONIC BALLAST, 120V LITHONIA LIGHTING OR SIMILAR
	LED DOWNLIGHT FIXTURE 10W, 120V HOUSING 4" CREE OR SIMILAR
	FLOOR SPOT CAT. PDX7 B 12LED CLW MVOLT SP FLCAS 345 LP1 LITHONIA LIGHTING OR SIMILAR
	GARDEN FIXTURE/REFLECTOR CAT. TL40122LV S F DB W BRONZELITE OR SIMILAR
	OUTDOOR EGRESS EMERGENCY LIGHT 20W,
RPS	REMOTE POWER SUPPLY INPUT 120/277 VCA, OUTPUT 5-24V
EXIT	WALL MOUNTED EXIT LIGHT/SIGN W/ BATTERY BACK-UP
	SINGLE RECEPTACLE OUTLET, 50A, 240V
	DUPLEX RECEPTACLE OUTLET, 20A, 120V
GFCI	DUPLEX RECEPTACLE OUTLET, 20A, 120V WITH GROUND FAULT CIRCUIT INTERRUPTER (GFCI)
	TWO DUPLEX RECEPTACLE OUTLET, 20A, 120V
J	JUNCTION-BOX
	MAIN CIRCUIT BREAKER & DISTRIBUTION PANEL
M	METER SOCKET
	GROUNDING ELECTRODE
T	THERMOSTAT
DOWN	CONDUIT/PREPARATION
	TV/CABLE/DATA OUTLET
	MICROPHONE OUTLET
	VOICE & DATA JACK
	PROJECTOR
	EMT CONDUIT
	PVC SCH 40 CONDUIT INSTALLED UNDERGROUND
	SAFETY SWITCH 3P-60A, 240 V, NEMA 3R
	SAFETY SWITCH 3P-30A, 240 V, NEMA 3R
	SAFETY SWITCH 2P-30A, 240 V, NEMA 3R
	EMT CONDUIT AND WIRE HOME RUN TO DESIGNATED CIRCUIT
$	SINGLE POLE SWITCH, 15A, 120V
$2	DOUBLE POLE SWITCH, 15A, 120V
VS	VENTILATION FAN 80 CFM, 0.3 SONES, 0.4A. 120 V. CAT. QTXE08O, BROAN OR SIMILAR

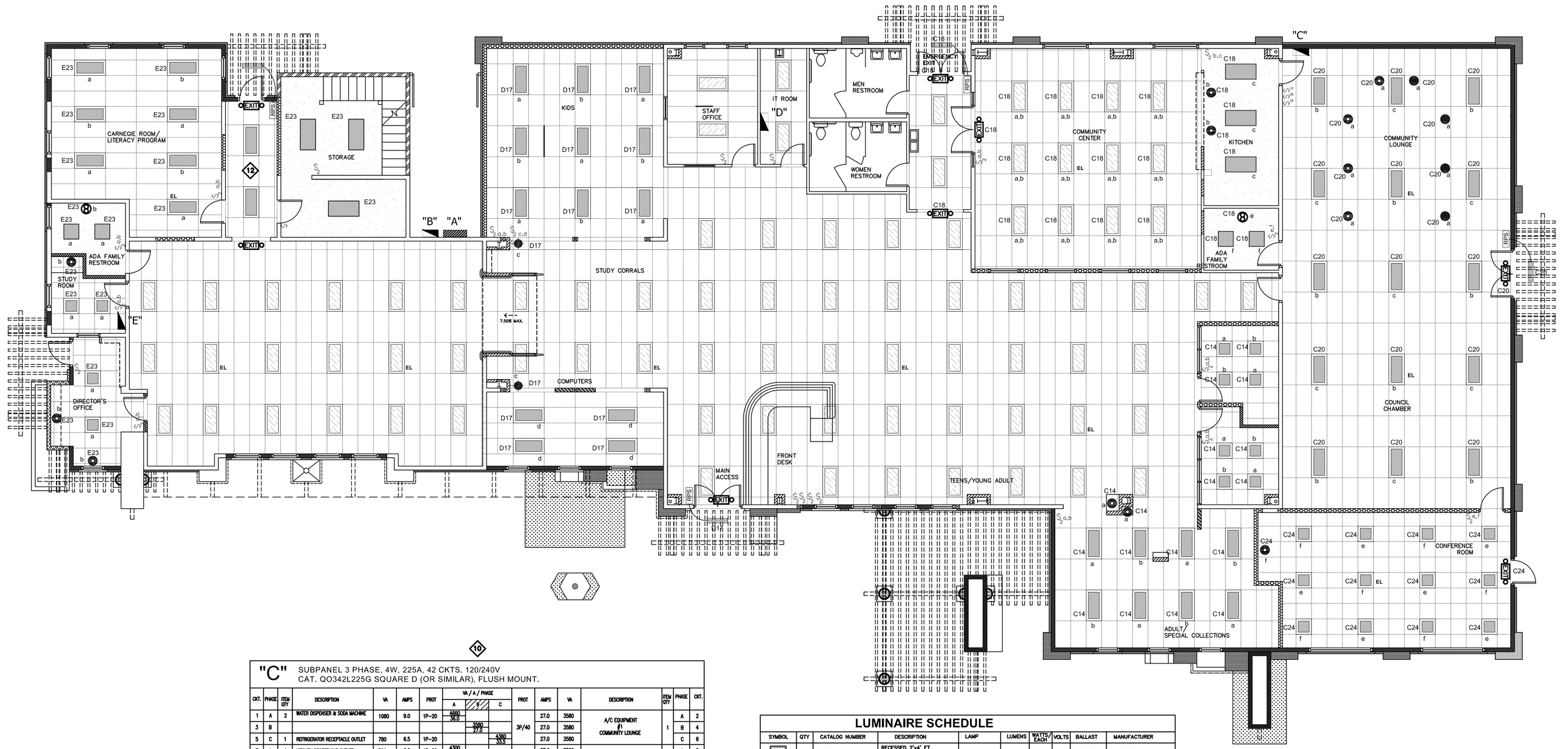

"C" SUBPANEL 3 PHASE, 4W, 225A, 42 CKTS, 120/240V
CAT. QO342L225G SQUARE D (OR SIMILAR). FLUSH MOUNT.

CKT.	PHASE	ITEM QTY	DESCRIPTION	VA	AMPS	PROT.	VA/A/PHASE A	VA/A/PHASE C	PROT.	AMPS.	VA	DESCRIPTION	ITEM QTY	PHASE	CKT.
1	A	2	WATER DISPENSER & SODA MACHINE	1080	9.0	1P-20	4680 39.0			27.0	3580	A/C EQUIPMENT @ COMMUNITY LOUNGE	1	A	2
3	B							5080 77.0	3P/40	27.0	3580			B	4
5	C	1	REFRIGERATOR RECEPTACLE OUTLET	780	6.5	1P-20		4280 33.5		27.0	3580			C	6
7	A	4	KITCHEN RECEPTACLE OUTLET	720	6.0	1P-20	4280 33.5			27.0	3580	A/C EQUIPMENT @ COUNCIL CHAMBER	1	A	8
9	B							5080 77.0	3P/40	27.0	3580			B	10
11	C	1	MICROWAVE OVEN	1500	12.5	1P-20		5080 90.5		27.0	3580			C	12
13	A	1	KITCHEN COFFE MAKER	1600	13.5	1P-20	2196 18.5		1P-20	5.0	596	STUDY ROOM & ADULT SPECIAL COLLECTIONS LIGHTS	18	A	14
15	B													B	16
17	C	3	COMMUNITY CENTER RECEPTACLE OUTLETS	540	4.5	1P-20		1540 13.0	1P-20	8.5	1000	COMMUNITY CENTER LIGHTS	19	C	18
19	A	9	COMMUNITY LOUNGE RECEPTACLE OUTLETS	1620	13.5	1P-20	1320 19.4		1P-20	5.9	710	COMMUNITY LOUNGE LIGHTS	24	A	20
21	B													B	22
23	C	10	COMMUNITY LOUNGE RECEPTACLE OUTLETS	1800	15.0	1P-20		2222 18.5	1P-20	3.5	422	CONFERENCE ROOM LIGHTS	14	C	24
25	A	8	COMMUNITY LOUNGE RECEPTACLE OUTLETS	1440	12.0	1P-20	3040 25.3		1P-20	13.5	1600	CONFERENCE ROOM COFFE MAKER	1	A	26
27	B							4200 37.3	3P/50	37.0	4450	STOVE	1	B	28
29	C	6	COUNCIL CHAMBER RECEPTACLE OUTLETS	1080	9.0	1P-20		5530 46.5		37.0	4450			C	30
31	A	6	COUNCIL CHAMBER RECEPTACLE OUTLETS	1080	9.0	1P-20	1080 9.0							A	32
33	B													B	34
35	C	4	COUNCIL CHAMBER RECEPTACLE OUTLETS	720	6.0	1P-20		720 6.0						C	36
37	A	4	CONFERENCE ROOM RECEPTACLE OUTLETS	720	6.0	1P-20	720 6.0							A	38
39	B													B	40
41	C	5	CONFERENCE ROOM RECEPTACLE OUTLETS	900	7.5	1P-20		900 7.5						C	42
			TOTAL VA/PHASE				17326	11710	20354						
			TOTAL AMPERS/PHASE				147.4	91.0	164.0						

"D" SUBPANEL 3 PHASE, 4 W, 120-240V, 225A, 42 CKTS
CAT. QO342L225G, SQUARE D (OR SIMILAR). FLUSH MOUNT.

CKT	PHASE	ITEM QTY	DESCRIPTION	VA	AMPS.	PROT.	VA/A/PHASE A	VA/A/PHASE C	PROT.	AMPS.	VA	DESCRIPTION	ITEM QTY	PHASE	CKT.
1	A		EXISTING LIGHTING LOAD			1P-20			1P-20			EXISTING LIGHTING LOAD		A	2
3	B													B	4
5	C		EXISTING LIGHTING LOAD			1P-20			1P-20			EXISTING LIGHTING LOAD		C	6
7	A		EXISTING LIGHTING LOAD			1P-20			1P-20			EXISTING LIGHTING LOAD		A	8
9	B													B	10
11	C		EXISTING LIGHTING LOAD			1P-20			1P-20			EXISTING LIGHTING LOAD		C	12
13	A		EXISTING LIGHTING LOAD			1P-20			1P-20			EXISTING LIGHTING LOAD		A	14
15	B													B	16
17	C	16	KIDS AND COMPUTER AREAS LIGHTS	566	4.7	1P-20		1648 13.7	1P-20	9.0	1080	COMPUTERS' AREA RECEPTACLE OUTLETS	6	C	18
19	A						1080 9.0		1P-20	9.0	1080	STUDY CORRALS RECEPTACLE OUTLETS	6	A	20
21	B													B	22
23	C							1080 9.0	1P-20	9.0	1080	COMPUTERS' AREA RECEPTACLE OUTLETS	6	C	24
25	A						1440 12.0		1P-20	12.0	1440	COMPUTERS' AREA RECEPTACLE OUTLETS	8	A	26
27	B													B	28
29	C							1268 10.5	1P-20	10.5	1260	KIDS AREA RECEPTACLE OUTLETS	7	C	30
31	A						1440 12.0		1P-20	12.0	1440	STUDY CORRAL RECEPTACLE OUTLETS	8	A	32
33	B													B	34
35	C							1080 9.0	1P-20	9.0	1080	STUDY ROOM RECEPTACLE OUTLETS	6	C	36
37	A						540 4.5		1P-20	4.5	540	IT ROOM RECEPTACLE OUTLETS	3	A	38
39	B													B	40
41	C													C	42
			TOTAL VA/PHASE				4500	5046							
			TOTAL AMPERS/PHASE				37.5	42.1							

LUMINAIRE SCHEDULE

SYMBOL	QTY	CATALOG NUMBER	DESCRIPTION	LAMP	LUMENS	WATTS/ EACH	VOLTS	BALLAST	MANUFACTURER
	63	EXISTING	RECESSED 2'x4' FT LIGHT FIXTURE	4-F32T8	4x2800	128	120	ELECTRONIC	EXISTING
EL	5	2GTB432A10 MVOLT GEB10RS EL	RECESSED 2'x4' FT LIGHT FIXTURE W/BATTERY BACKUP	4-F32T8	4x2800	128	120	ELECTRONIC	LITHONIA LIGHTING OR SIMILAR
	42	CR24 40L 40KS	RECESSED 2'x4' FT ARCHITECTURAL LED TROFFER	LED	4000	40	120	ELECTRONIC	CREE OR SIMILAR
EL	3	CR24 40L 40KS EB14	RECESSED 2'x4' FT ARCHITECTURAL LED TROFFER FIXTURE W/BATTERY BACKUP	LED	4000	40	120	ELECTRONIC	CREE OR SIMILAR
	6	CR24 40L 40KS	SURFACE MOUNT 2'x4' FT HIGH EFFICACY ARCHITECTURAL LED TROFFER	LED	4000	40	120	ELECTRONIC	CREE OR SIMILAR
	23	CR22 32L40KS	RECESSED 2'x2' FT ARCHITECTURAL LED TROFFER	LED	3200	32	120	ELECTRONIC	CREE OR SIMILAR
EL	1	CR22 32L40KS EB14	RECESSED 2'x2' FT ARCHITECTURAL LED TROFFER W/ BATTERY BACK UP	LED	3200	32	120	ELECTRONIC	CREE OR SIMILAR
	4	CR2232L35KCMA	SURFACE MOUNT 2'x2' FT HIGH EFFICACY ARCHITECTURAL LED TROFFER	LED	3200	32	120	ELECTRONIC	CREE OR SIMILAR
	9	XSPW A02 FC 12P	EXTERIOR WALL MOUNT LIGHT FIXTURE	LED	2814	42	120	ELECTRONIC	CREE OR SIMILAR
	2	AVSP1 13DTT MDM 120	WALL SCONCE LIGHT FIXTURE	13DTT	735	13	120	ELECTRONIC	LITHONIA LIGHTING OR SIMILAR
	13	ADV 13DTT 4 MB LD COL 120	CFL DOWNLIGHTING FIXTURE	13DTT	735	13	120	ELECTRONIC	LITHONIA LIGHTING OR SIMILAR
	16	KR 4RL 27K 120 +WHT	LED DOWNLIGHTING FIXTURE	LED	660	10	120	ELECTRONIC	CREE OR SIMILAR
	23	PDX7 B 12LED CLW MVOLT SP FLCAS 345 LP1	FLOOR SPOT LUMINAIRE	LED	780	12	120	ELECTRONIC	LITHONIA LIGHTING OR SIMILAR
	14	TL40122LV S F DB W	GARDEN FIXTURE/ REFLECTOR	LED	780	12	120	ELECTRONIC	BRONZELITE OR SIMILAR
EXIT	7	LHQMSWRN	WALL MOUNTED EXIT SIGN/ W/ BATTERY BACK-UP	LED	90	32	120	ELECTRONIC	LITHONIA LIGHTING OR SIMILAR
	4	WUEB620BTDG	OUTDOOR EGRESS EMERGENCY LIGHT	LED	1300	20	120	ELECTRONIC	RIGHTED RSC LIGHTING OR SIMILAR

"E" SUBPANEL 3 PHASE, 4 W, 120-240V, 225A, 42 CKTS
CAT. QO342L225G, SQUARE D (OR SIMILAR). FLUSH MOUNT.

CKT	PHASE	ITEM QTY	DESCRIPTION	VA	AMPS.	PROT.	VA/A/PHASE A	VA/A/PHASE C	PROT.	AMPS.	VA	DESCRIPTION	ITEM QTY	PHASE	CKT.
1	A		EXISTING LIGHTING LOAD			1P-20			1P-20			EXISTING LIGHTING LOAD		A	2
3	B													B	4
5	C		EXISTING LIGHTING LOAD			1P-20			1P-20			EXISTING LIGHTING LOAD		C	6
7	A		EXISTING LIGHTING LOAD			1P-20			1P-20			EXISTING LIGHTING LOAD		A	8
9	B													B	10
11	C		EXISTING LIGHTING LOAD			1P-20			1P-20			EXISTING LIGHTING LOAD		C	12
13	A		EXISTING LIGHTING LOAD			1P-20			1P-20			EXISTING LIGHTING LOAD		A	14
15	B													B	16
17	C		EXISTING LIGHTING LOAD			1P-20			1P-20			EXISTING LIGHTING LOAD		C	18
19	A		EXISTING LIGHTING LOAD			1P-20			1P-20			EXISTING LIGHTING LOAD		A	20
21	B													B	22
23	C	20	CARNEGIE STUDY ROOMS AND DIRECTOR'S OFFICE LIGHTS	550	4.6	1P-20		1450 12.1	1P-20	7.5	900	RECEPTACLE OUTLETS DIRECTOR'S OFFICE	5	C	24
25	A					1P-20	720 6.0		1P-20	6.5	720	STUDY, RESTROM RECEPTACLE OUTLETS	4	A	26
27	B													B	28
29	C							1260 10.5	1P-20	10.5	1260	CARNEGIE ROOM RECEPTACLE OUTLETS	7	C	30
31	A					360 3.0			1P-20	3.0	360	STORAGE RECEPTACLE OUTLETS	2	A	32
33	B													B	34
35	C													C	36
37	A													A	38
39	B													B	40
41	C													C	42
			TOTAL VA/PHASE												
			TOTAL AMPERS/PHASE												

ELECTRICAL NOTES

1. ALL WORK TO BE DONE ACCORDING WITH CALIFORNIA ELECTRICAL CODE 2013 EDITION.
2. EXISTING A/C UNITS, MOUNTED ON ROOF
3. NEW A/C UNITS, MOUNTED ON ROOF
4. RUN ONE 1/2" EMT CONDUIT FOR THE THERMOSTATS
5. EMT CONDUIT, RUN UNDER THE ROOF INSIDE THE BUILDING
6. EXTERIOR LIGHT FIXTURE CONTROL
   CIRCUIT B18 – TIMER
   CIRCUIT B20 – PHOTOCELL & RELAY
   INSTALL THE TIMER & THE LIGHTING RELAY IN AN ENCLOSURE NEXT TO THE SUBPANEL "B"
7. REPLACE TWO EXISTING SUBPANELS IN STUDY ROOM AREA, FOR A NEW SUBPANEL OF 42 CKTS. THREE PHASE, 120–240V, 225A, CAT. QO342L225G SQUARE D (OR SIMILAR)
8. REPLACE THE EXISTING SUBPANEL ("B") FOR A NEW SUBPANEL OF 42 CKTS. THREE PHASE, 120–240V, 225A CAT. QO342L225GRB SQUARE D (OR SIMILAR)
9. MOVE WIRING FOR THE EXISTING KITCHEN APPLIANCES FROM THE EXISTING SUBPANEL "D" TO THE NEW SUBPANEL "C"
10. PHASE B IS THE HIGH LEG. AND SHALL BE DURABLY AND PERMANENTLY MARKED BY AN OUTER FINISH THAT IS ORANGE IN COLOR, OR BY OTHER EFFECTIVE MEANS.
11. CHANGE THE RATING PLUG IN THE EXISTING MAIN CIRCUIT BREAKER, TO UPGRADE IT, FROM 3P–400A TO 3P–600A. MAIN CIRCUIT BREAKER FRAME CATALOG NUMBER SGHA36AT0600, GE. NEW RATING PLUG CATALOG NUMBER SRPG600A600, GE
12. CONNECT TO THE GENERAL LIGHTING AREA CIRCUITS THE CORRIDOR LIGHTS (2), EXIT SIGNS (2) & OUTDOOR EGRESS LIGHT
13. VERIFY THE RESISTANCE TO GROUND IT IS NOT MORE THAN 25 OHMS ANYTIME, USE SUPLEMENTAL ELECTRODES (METAL WATER PIPE, CONCRETE–ENCASED ELECTRODE OR METAL FRAME OF BUILDING) TO REDUCE RESISTENCE TO GROUND.

SHEET: 2 OF: 4
DWN. BY: L.A.R.
REV. BY: R.L.
APP. BY: R.L.

LIBRARY EXPANSION PROJECT
LIGHTING PLAN
IN THE CITY OF IMPERIAL, CALIFORNIA | DATE: 05/13/15

E02

REGISTERED PROFESSIONAL ENGINEER JESUS LUIS REYES No. E 15446 ELECTRICAL STATE OF CALIFORNIA
SEAL:

REVISIONS

NO.	DESCRIPTION:	DATE:	BY:
1			
2			
3			

BY:
DATE:
R.C.E. NO. XXXXX

FOR REFERENCE ONLY

City of Imperial California

ELECTRICAL SYMBOLS LEGEND

	SUBPANEL
	2'x4' FT, LIGHT FIXTURE 4-F32T8 LAMPS, ELECTRONIC BALLAST 120V RECESSED MOUNT
EL	2'x4' FT, LIGHT FIXTURE 4-F32T8 LAMPS, ELECTRONIC BALLAST 120V RECESSED MOUNT W/BATTERY BACK UP
	CR24, 2'x4' FT, ARCHITECTURAL LED TRAFFER, WITH CREE SMARTCAST TECHNOLOGY 40W, 120V RECESSED MOUNT CREE OR SIMILAR
EL	CR24, 2'x4' FT, ARCHITECTURAL LED TRAFFER, WITH CREE SMARTCAST TECHNOLOGY 40W, 120V RECESSED MOUNT W/BATTERY BACK UP CREE OR SIMILAR
	CR24, 2'x4' FT, ARCHITECTURAL LED TRAFFER, WITH CREE SMARTCAST TECHNOLOGY 40W, 120V SURFACE MOUNT CREE OR SIMILAR
	CR32, 2'x2' FT, ARCHITECTURAL LED TROFFER, WITH CREE SMARTCAST TECHNOLOGY 32W, 120V RECESSED MOUNT CREE OR SIMILAR
EL	CR32, 2'x2' FT, ARCHITECTURAL LED TROFFER, WITH CREE SMARTCAST TECHNOLOGY 32W, 120V RECESSED MOUNT W/BATTERY BACKUP CREE OR SIMILAR
	CR32, 2'x2' FT, ARCHITECTURAL LED TROFFER, WITH CREE SMARTCAST TECHNOLOGY 32W, 120V] SURFACE MOUNT CREE OR SIMILAR
	LED WALL MOUNT LIGHT FIXTURE 42W, 120V CREE OR SIMILAR
	WALL SCONCE LIGHT FIXTURE, 1-13DTT CFL, ELECTRONIC BALLAST, 120V LITHONIA LIGHTING OR SIMILAR
	CFL DOWNLIGHTING FIXTURE, 1-13DTT CFL, ELECTRONIC BALLAST, 120V LITHONIA LIGHTING OR SIMILAR
	LED DOWNLIGHT FIXTURE 10W, 120V HOUSING 4" CREE OR SIMILAR
	FLOOR SPOT CAT. PDX7 B 12LED CLW MVOLT SP FLCAS 345 LP1 LITHONIA LIGHTING OR SIMILAR
	GARDEN FIXTURE/REFLECTOR CAT. TL40120LW S F DB W BRONZELITE OR SIMILAR
	OUTDOOR EGRESS EMERGENCY LIGHT 20W,
RPS	REMOTE POWER SUPPLY INPUT 120/277 VCA, OUTPUT 5-24V
EXIT	WALL MOUNTED EXIT LIGHT/SIGN W/ BATTERY BACK-UP
	SINGLE RECEPTACLE OUTLET, 50A, 240V
	DUPLEX RECEPTACLE OUTLET, 20A, 120V
GFCI	DUPLEX RECEPTACLE OUTLET 20A, 120V WITH GROUND FAULT CIRCUIT INTERRUPTER (GFCI)
	TWO DUPLEX RECEPTACLE OUTLET, 20A, 120V
J	JUNCTION-BOX
	MAIN CIRCUIT BREAKER & DISTRIBUTION PANEL
M	METER SOCKET
	GROUNDING ELECTRODE
T	THERMOSTAT
CONDUIT DOWN	CONDUIT/PREPARATION
	TV/CABLE/DATA OUTLET
	MICROPHONE OUTLET
	VOICE & DATA JACK
	PROJECTOR
	EMT CONDUIT
	PVC SCH 40 CONDUIT INSTALLED UNDERGROUND
	SAFETY SWITCH 3P-60A, 240 V, NEMA 3R
	SAFETY SWITCH 3P-30A, 240 V, NEMA 3R
	SAFETY SWITCH 2P-30A, 240 V, NEMA 3R
	EMT CONDUIT AND WIRE HOME RUN TO DESIGNATED CIRCUIT
$	SINGLE POLE SWITCH, 15A, 120V
$2	DOUBLE POLE SWITCH, 15A, 120V
M	VENTILATION FAN 80 CFM, 0.3 SONES, 0.4A. 120 V. CAT. QTXE08O, BROAN OR SIMILAR

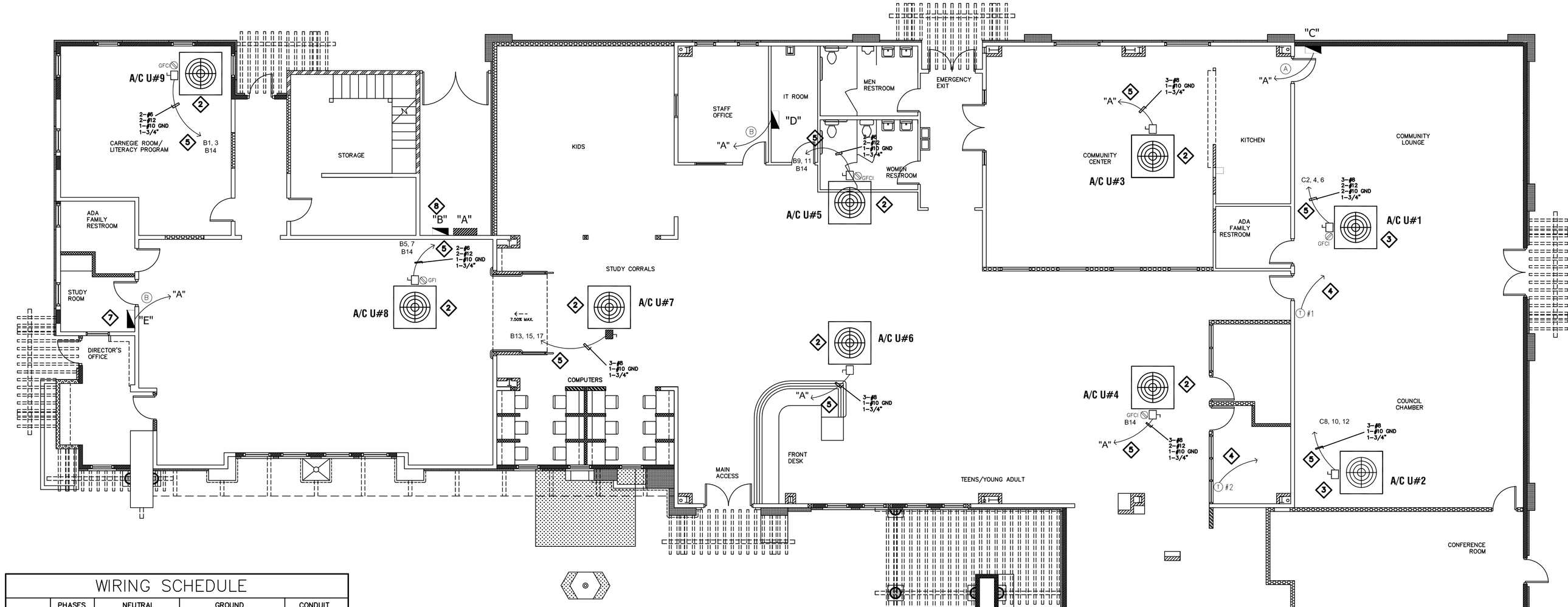

MECHANICAL PLAN
N.T.S.

WIRING SCHEDULE

	PHASES	NEUTRAL	GROUND	CONDUIT
Ⓐ	3-3/0	1-2/0	1-6	2 1/2"
Ⓑ	3-2	1-2	1-8	1 1/2"
Ⓒ	3-8		1-10	3/4"

"B" SUBPANEL 3 PHASE, 4W, 225A, 42 CKTS. 120/240V CAT. QO342L225GRB SQUARE D (OR SIMILAR), SURFACE MOUNT.

CKT.	PHASE	ITEM QTY	DESCRIPTION	VA	AMPS	PROT	VA/Φ/PHASE A	B	C	PROT	AMPS	VA	DESCRIPTION	ITEM QTY	PHASE	CKT.
1	A	1	A/C UNIT #9 5 TONS	4370	38.0	2P-50	4370 38.0			2P-50	–	–			A	2
3	B			4370	38.0			4370 38.0			–	–			B	4
5	C	1	A/C UNIT #8 5 TONS	4600	40.0	2P-50			4600 40.0	1P-20	2.0	300	SPRINKLERS	1	C	6
7	A			4600	40.0		4600 40.0			1P-20	–	–	–	–	A	8
9	B	1	A/C UNIT #5 5 TONS	4428	38.5	2P-50			4628 38.5	3P-20	20.8	2500	WATER HEATER	1	B	10
11	C			4428	38.5				4628 38.5		20.8	2500			C	12
13	A	1	A/C UNIT #7 3 TONS	2520	19.0	3P-30	2520 19.0			1P-20	6.0	720	A/C UNITS SERVICE RECEPT. OUTLETS	4	A	14
15	B			2520	19.0			2520 19.0							B	16
17	C			2520	19.0				3964 20.7	1P-20	3.7	444	EXTERIOR LIGHTS	38	C	18
19	A						547 4.6			1P-20	4.6	947	EXTERIOR LIGHTS	23	A	20
21	B														B	22
23	C							540 4.5		1P-20	4.5	540	EXTERIOR RECEPT. OUTLET	3	C	24
25	A						720 6.0			1P-20	6.0	720	EXTERIOR RECEPT. OUTLET	4	A	26
27	B														B	28
29	C														C	30
TOTAL VA/PHASE							13477	13818	15332							
TOTAL AMPERS/PHASE							113.6	116.3	128.5							

"C" SUBPANEL 3 PHASE, 4W, 225A, 42 CKTS. 120/240V CAT. QO342L225G SQUARE D (OR SIMILAR), FLUSH MOUNT.

CKT.	PHASE	ITEM QTY	DESCRIPTION	VA	AMPS	PROT	VA/Φ/PHASE A	B	C	PROT	AMPS	VA	DESCRIPTION	ITEM QTY	PHASE	CKT.
1	A	2	WATER DISPENSER & SODA MACHINE	1080	9.0	1P-20	4560 38.0								A	2
3	B							5080 42.3		3P/40	27.0	3580	A/C EQUIPMENT #1 COMMUNITY LOUNGE	1	B	4
5	C	1	REFRIGERATOR RECEPTACLE OUTLET	780	6.5	1P-20			4360 36.3		27.0	3580			C	6
7	A	4	KITCHEN RECEPTACLE OUTLET	720	6.0	1P-20	4360 36.3				27.0	3580			A	8
9	B							3580 29.8		3P/40	27.0	3580	A/C EQUIPMENT #2 COUNCIL CHAMBER	1	B	10
11	C	1	MICROWAVE OVEN	1500	12.5	1P-20			5080 42.3		27.0	3580			C	12
13	A	1	KITCHEN COFFE MAKER	1600	13.5	1P-20	2186 18.5			1P-20	5.0	596	STUDY ROOM & ADULT SPECIAL COLLECTIONS LIGHTS	18	A	14
15	B							2186 18.5							B	16
17	C	3	COMMUNITY CENTER RECEPTACLE OUTLETS	540	4.5	1P-20			1540 13.0	1P-20	8.3	1000	COMMUNITY CENTER LIGHTS	19	C	18
19	A	9	COMMUNITY LOUNGE RECEPTACLE OUTLETS	1620	13.5	1P-20	1320 19.4			1P-20	5.9	710	COMMUNITY LOUNGE LIGHTS	24	A	20
21	B							1320 19.4							B	22
23	C	10	COMMUNITY LOUNGE RECEPTACLE OUTLETS	1800	15.0	1P-20			2222 18.5	1P-20	3.5	422	CONFERENCE ROOM LIGHTS	14	C	24
25	A	8	COMMUNITY LOUNGE RECEPTACLE OUTLETS	1440	12.0	1P-20	3040 25.5			1P-20	13.5	1800	CONFERENCE ROOM COFFE MAKER	1	A	26
27	B							4500 37.5			37.0	4450			B	28
29	C	6	COUNCIL CHAMBER RECEPTACLE OUTLETS	1080	9.0	1P-20			5530 46.0	3P/56	37.0	4450	STOVE	1	C	30
31	A	6	COUNCIL CHAMBER RECEPTACLE OUTLETS	1080	9.0	1P-20	1080 9.0								A	32
33	B														B	34
35	C	4	COUNCIL CHAMBER RECEPTACLE OUTLETS	720	6.0	1P-20			720 6.0						C	36
37	A	4	CONFERENCE ROOM RECEPTACLE OUTLETS	720	6.0	1P-20	720 6.0								A	38
39	B														B	40
41	C	5	CONFERENCE ROOM RECEPTACLE OUTLETS	900	7.5	1P-20			900 7.5						C	42
TOTAL VA/PHASE							17326	11710	20354							
TOTAL AMPERS/PHASE							147.4	91.0	164.0							

A/C UNITS ELECTRICAL INFORMATION

UNIT	MAKE	MODEL	DESCRIPTION	CAPACITY	VOLTS/PHASE/HZ	MINIMUM CIRCUIT AMPACITY	MAXIMUM BRANCH CIRCUIT PROTECTION	BRANCH CIRCUIT CONDUCTOR SIZE EMT SIZE
A/C U#1	DAY & NIGHT	RHHO60*0XAOAAA	ROOF MOUNTED UNIT	5 TON.	208-230/3/60	30.2	45	3-#8, 1-#10 GROUND 1-3/4"
A/C U#2	DAY & NIGHT	RHHO60*0XAOAAA	ROOF MOUNTED UNIT	5 TON.	208-230/3/60	30.2	45	3-#8, 1-#10 GROUND 1-3/4"
A/C U#3	RHEEM	RJMA-A060CL	ROOF MOUNTED UNIT	5 TON.	208-230/3/60	32.0	50	3-#8, 1-#10 GROUND 1-3/4"
A/C U#4	RHEEM	RJMA-A060CL	ROOF MOUNTED UNIT	5 TON.	208-230/3/60	32.0	50	3-#8, 1-#10 GROUND 1-3/4"
A/C U#5		B1H1060A06A	ROOF MOUNTED UNIT	5 TON.	208-230/1/60	44.8	60	2-#6, 1-#10 GROUND 1-3/4"
A/C U#6	RHEEM	RJMA-A060CL	ROOF MOUNTED UNIT	5 TON.	208-230/3/60	32.0	50	3-#8, 1-#10 GROUND 1-3/4"
A/C U#7	RHEEM	RJMA-A036CM	ROOF MOUNTED UNIT	3 TON.	208-230/3/60	22.0	30	3-#8, 1-#10 GROUND 1-3/4"
A/C U#8	RHEEM	RJMA-A060JL	ROOF MOUNTED UNIT	5 TON.	208-230/1/60	49.0	60	2-#6, 1-#10 GROUND 1-3/4"
A/C U#9	AIR	RGPMA060JK	ROOF MOUNTED UNIT	5 TON.	208-230/1/60	41.0	60	2-#6, 1-#10 GROUND 1-3/4"

ELECTRICAL NOTES

1. ALL WORK TO BE DONE ACCORDING WITH CALIFORNIA ELECTRICAL CODE 2013 EDITION.
2. EXISTING A/C UNITS, MOUNTED ON ROOF
3. NEW A/C UNITS, MOUNTED ON ROOF
4. RUN ONE 1/2" EMT CONDUIT FOR THE THERMOSTATS
5. EMT CONDUIT, RUN UNDER THE ROOF INSIDE THE BUILDING
6. EXTERIOR LIGHT FIXTURE CONTROL
   CIRCUIT B18 – TIMER
   CIRCUIT B20 – PHOTOCELL & RELAY
   INSTALL THE TIMER & THE LIGHTING RELAY IN AN ENCLOSURE NEXT TO THE SUBPANEL "B"
7. REPLACE TWO EXISTING SUBPANELS IN STUDY ROOM AREA, FOR A NEW SUBPANEL OF 42 CKTS. THREE PHASE, 120-240V, 225A, CAT. QO342L225G SQUARE D (OR SIMILAR)
8. REPLACE THE EXISTING SUBPANEL ("B") FOR A NEW SUBPANEL OF 42 CKTS. THREE PHASE, 120-240V, 225A CAT. QO342L225GRB SQUARE D (OR SIMILAR)
9. MOVE WIRING FOR THE EXISTING KITCHEN APPLIANCES FROM THE EXISTING SUBPANEL "D" TO THE NEW SUBPANEL "C"
10. PHASE B IS THE HIGH LEG. AND SHALL BE DURABLY AND PERMANENTLY MARKED BY AN OUTER FINISH THAT IS ORANGE IN COLOR, OR BY OTHER EFFECTIVE MEANS.
11. CHANGE THE RATING PLUG IN THE EXISTING MAIN CIRCUIT BREAKER, TO UPGRADE IT, FROM 3P-400A TO 3P-600A. MAIN CIRCUIT BREAKER FRAME CATALOG NUMBER SGHA36AT0600, GE. NEW RATING PLUG CATALOG NUMBER SRPG600A600, GE
12. CONNECT TO THE GENERAL LIGHTING AREA CIRCUITS THE CORRIDOR LIGHTS (2), EXIT SIGNS (2) & OUTDOOR EGRESS LIGHT
13. VERIFY THE RESISTANCE TO GROUND IT IS NOT MORE THAN 25 OHMS ANYTIME, USE SUPLEMENTAL ELECTRODES (METAL WATER PIPE, CONCRETE-ENCASED ELECTRODE OR METAL FRAME OF BUILDING) TO REDUCE RESISTENCE TO GROUND.

"A"

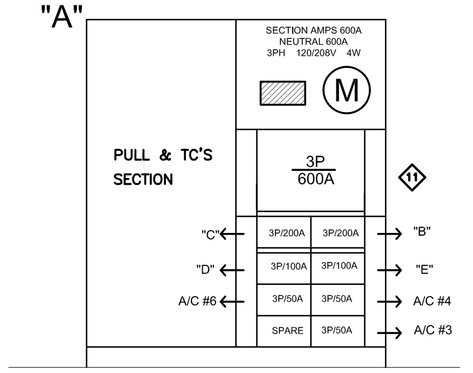

EXISTING MAIN CIRCUIT BRAKER & DISTRIBUTION PANEL
N.T.S.

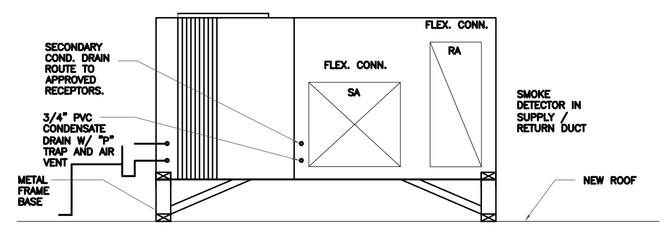

AC MOUNTING DETAIL
N.T.S.

FOR REFERENCE ONLY

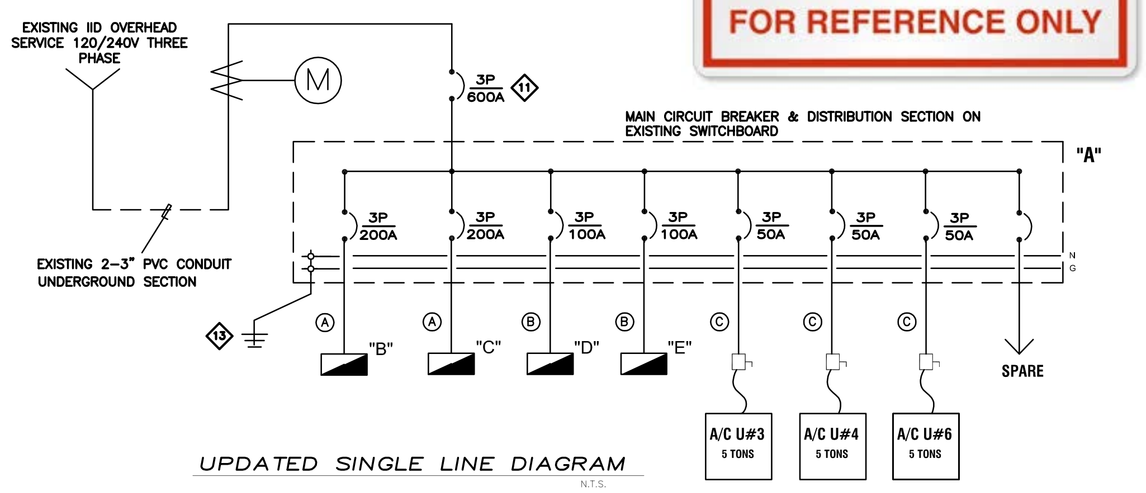

UPDATED SINGLE LINE DIAGRAM
N.T.S.

SHEET: 3 OF: 4
DWN. BY: L.A.R.
REV. BY: R.L.
APP. BY: R.L.

LIBRARY EXPANSION PROJECT
MECHANICAL PLAN
IN THE CITY OF IMPERIAL, CALIFORNIA
DATE: 05/13/15

E03

REGISTERED PROFESSIONAL ENGINEER
JOSE LUIS REYES
NO. 15446
ELECTRICAL
STATE OF CALIFORNIA
SEAL:

BY:
DATE:
XXXXXX
R.C.E. NO. XXXXX

REVISIONS

NO.	DESCRIPTION:	DATE:	BY:
1			
2			
3			

City of Imperial California

ELECTRICAL SYMBOLS LEGEND

	SUBPANEL
	2'x4' FT, LIGHT FIXTURE 4-F32T8 LAMPS, ELECTRONIC BALLAST 120V RECESSED MOUNT
EL	2'x4' FT, LIGHT FIXTURE 4-F32T8 LAMPS, ELECTRONIC BALLAST 120V RECESSED MOUNT W/BATTERY BACK UP
	CR24, 2'x4' FT, ARCHITECTURAL LED TRAFFER, WITH CREE SMARTCAST TECHNOLOGY 40W, 120V RECESSED MOUNT CREE OR SIMILAR
EL	CR24, 2'x4' FT, ARCHITECTURAL LED TRAFFER, WITH CREE SMARTCAST TECHNOLOGY 40W, 120V RECESSED MOUNT W/BATTERY BACK UP CREE OR SIMILAR
	CR24, 2'x4' FT, ARCHITECTURAL LED TRAFFER, WITH CREE SMARTCAST TECHNOLOGY 40W, 120V SURFACE MOUNT CREE OR SIMILAR
	CR22, 2'x2' FT, ARCHITECTURAL LED TROFFER, WITH CREE SMARTCAST TECHNOLOGY 32W, 120V RECESSED MOUNT CREE OR SIMILAR
EL	CR22, 2'x2' FT, ARCHITECTURAL LED TROFFER, WITH CREE SMARTCAST TECHNOLOGY 32W, 120V RECESSED MOUNT W/BATTERY BACKUP CREE OR SIMILAR
	CR22, 2'x2' FT, ARCHITECTURAL LED TROFFER, WITH CREE SMARTCAST TECHNOLOGY 32W, 120V SURFACE MOUNT CREE OR SIMILAR
	LED WALL MOUNT LIGHT FIXTURE 42W, 120V CREE OR SIMILAR
	WALL SCONCE LIGHT FIXTURE, 1-13DTT CFL, ELECTRONIC BALLAST, 120V LITHONIA LIGHTING OR SIMILAR
	CFL DOWNLIGHTING FIXTURE, 1-13DTT CFL, ELECTRONIC BALLAST, 120V LITHONIA LIGHTING OR SIMILAR
	LED DOWNLIGHT FIXTURE 10W, 120V HOUSING 4" CREE OR SIMILAR
	FLOOR SPOT CAT. PDX7 B 12LED CLW MVOLT SP FLCAS 345 LP1 LITHONIA LIGHTING OR SIMILAR
	GARDEN FIXTURE/REFLECTOR CAT. TL40120LV S F DB W BRONZELITE OR SIMILAR
	OUTDOOR EGRESS EMERGENCY LIGHT 20W,
RPS	REMOTE POWER SUPPLY INPUT 120/277 VCA, OUTPUT 5-24V
EXIT	WALL MOUNTED EXIT LIGHT/SIGN W/ BATTERY BACK-UP
	SINGLE RECEPTACLE OUTLET, 50A, 240V
	DUPLEX RECEPTACLE OUTLET, 20A, 120V
GFCI	DUPLEX RECEPTACLE OUTLET, 20A, 120V WITH GROUND FAULT CIRCUIT INTERRUPTER (GFCI)
	TWO DUPLEX RECEPTACLE OUTLET, 20A, 120V
J	JUNCTION-BOX
	MAIN CIRCUIT BREAKER & DISTRIBUTION PANEL
M	METER SOCKET
	GROUNDING ELECTRODE
T	THERMOSTAT
DOWN	CONDUIT/PREPARATION
	TV/CABLE/DATA OUTLET
	MICROPHONE OUTLET
	VOICE & DATA JACK
	PROJECTOR
	EMT CONDUIT
	PVC SCH 40 CONDUIT INSTALLED UNDERGROUND
	SAFETY SWITCH 3P-60A, 240 V, NEMA 3R
	SAFETY SWITCH 3P-30A, 240 V, NEMA 3R
	SAFETY SWITCH 2P-30A, 240 V, NEMA 3R
	EMT CONDUIT AND WIRE HOME RUN TO DESIGNATED CIRCUIT
$	SINGLE POLE SWITCH, 15A, 120V
$2	DOUBLE POLE SWITCH, 15A, 120V
M	VENTILATION FAN 80 CFM, 0.3 SONES, 0.4A. 120 V. CAT. QTXE080, BROAN OR SIMILAR

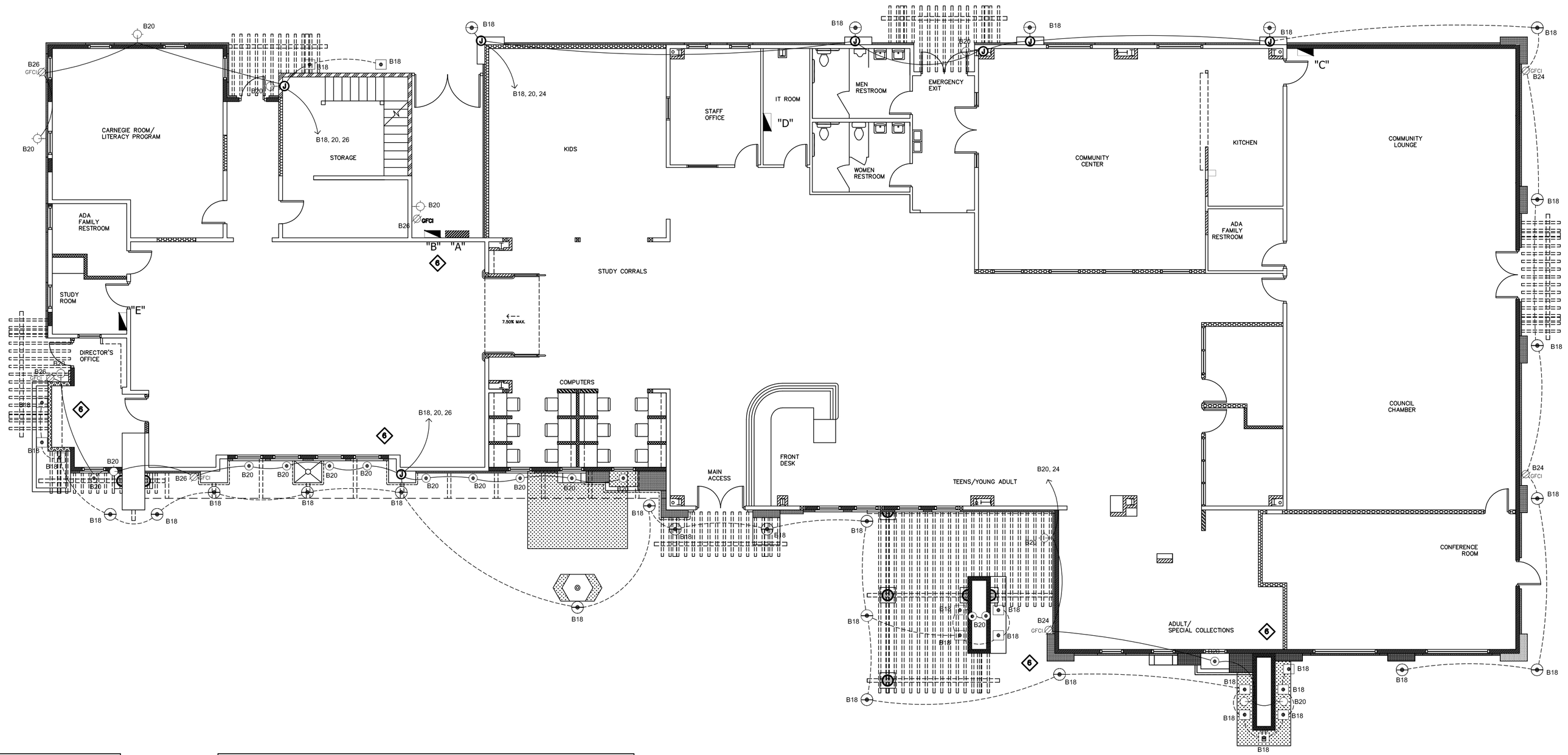

"B" SUBPANEL 3 PHASE, 4W, 225A, 42 CKTS. 120/240V
CAT. QO342L225GRB SQUARE D (OR SIMILAR), SURFACE MOUNT.

CKT.	PHASE	ITEM QTY	DESCRIPTION	VA	AMPS	PROT	VA / A / PHASE A	B	C	PROT	AMPS	VA	DESCRIPTION	ITEM QTY	PHASE	CKT.
1	A	1	A/C UNIT #9 5 TONS	4370	38.0	2P-50	4370 38.0			2P-50	–	–	RV CAMP RECEPT. OUTLET	1	A	2
3	B			4370	38.0			4370 38.0			–	–			B	4
5	C	1	A/C UNIT #8 5 TONS	4600	40.0	2P-50			4900 42.9	1P-20	2.0	300	SPRINKLERS	1	C	6
7	A			4600	40.0		4600 40.0			1P-20	–	–	–	–	A	8
9	B	1	A/C UNIT #5 5 TONS	4428	38.5	2P-50			6928 59.5	3P-20	20.8	2500	WATER HEATER	1	B	10
11	C			4428	38.5			6928 59.5			20.8	2500			C	12
13	A	1	A/C UNIT #7 3 TONS	2520	19.0	3P-30	5140 25.5			1P-20	6.0	720	A/C UNITS SERVICE RECEPT. OUTLETS	4	A	14
15	B			2520	19.0			2520 19.0							B	16
17	C			2520	19.0				2964 22.7	1P-20	3.7	444	EXTERIOR LIGHTS	38	C	18
19	A						547 4.6			1P-20	4.6	947	EXTERIOR LIGHTS	23	A	20
21	B														B	22
23	C								540 4.5	1P-20	4.5	540	EXTERIOR RECEPT. OUTLET	3	C	24
25	A						720 6.0			1P-20	6.0	720	EXTERIOR RECEPT. OUTLET	4	A	26
27	B														B	28
29	C														C	30
TOTAL VA/PHASE				13477	13818	15332										
TOTAL AMPERS/PHASE				113.6	116.3	128.5										

LUMINAIRE SCHEDULE

SYMBOL	QTY	CATALOG NUMBER	DESCRIPTION	LAMP	LUMENS	WATTS/ EACH	VOLTS	BALLAST	MANUFACTURER
	63	EXISTING	RECESSED 2'x4' FT LIGHT FIXTURE	4-F32T8	4x2800	128	120	ELECTRONIC	EXISTING
EL	5	2GTB432A19 MVOLT GEB10IS EL	RECESSED 2'x4' FT LIGHT FIXTURE W/BATTERY BACKUP	4-F32T8	4x2800	128	120	ELECTRONIC	LITHONIA LIGHTING OR SIMILAR
	42	CR24 40L 40KS	RECESSED 2'x4' FT ARCHITECTURAL LED TROFFER	LED	4000	40	120	ELECTRONIC	CREE OR SIMILAR
EL	3	CR24 40L 40KS EB14	RECESSED 2'x4' FT ARCHITECTURAL LED TROFFER W/BATTERY BACKUP	LED	4000	40	120	ELECTRONIC	CREE OR SIMILAR
	6	CR24 40L 40KS	SURFACE MOUNT 2'x4' FT ARCHITECTURAL LED TROFFER	LED	4000	40	120	ELECTRONIC	CREE OR SIMILAR
	23	CR22 32L40KS	RECESSED 2'x2' FT ARCHITECTURAL LED TROFFER	LED	3200	32	120	ELECTRONIC	CREE OR SIMILAR
EL	1	CR22 32L40KS EB14	RECESSED 2'x2' FT ARCHITECTURAL LED TROFFER W/ BATTERY BACK UP	LED	3200	32	120	ELECTRONIC	CREE OR SIMILAR
	4	CR2232L35KCMA	SURFACE MOUNT 2'x2' FT ARCHITECTURAL LED TROFFER	LED	3200	32	120	ELECTRONIC	CREE OR SIMILAR
	9	XSPW A02 FC 12P	EXTERIOR WALL MOUNT LIGHT FIXTURE	LED	2814	42	120	ELECTRONIC	CREE OR SIMILAR
	2	AVSP1 13DTT MDM 120	WALL SCONCE LIGHT FIXTURE	13DTT	735	13	120	ELECTRONIC	LITHONIA LIGHTING OR SIMILAR
	13	AFV 13DTT 4 MB LD CUL 120	CFL DOWNLIGHTING FIXTURE	13DTT	735	13	120	ELECTRONIC	LITHONIA LIGHTING OR SIMILAR
	16	KR 4IN 27K 120 +4DUT	LED DOWNLIGHTING FIXTURE	LED	660	10	120	ELECTRONIC	CREE OR SIMILAR
	23	PDX7 B 12LED CLW MVOLT SP FLCAS 345 LP1	FLOOR SPOT LUMINAIRE	LED	780	12	120	ELECTRONIC	LITHONIA LIGHTING OR SIMILAR
	14	TL40120LV S F DB W	GARDEN FIXTURE/ REFLECTOR	LED	780	12	120	ELECTRONIC	BRONZELITE OR SIMILAR
EXIT	7	LHQMSWRN	WALL MOUNTED EXIT SIGN W/ BATTERY BACK-UP	LED	90	32	120	ELECTRONIC	LITHONIA LIGHTING OR SIMILAR
	4	MUEB820BTDG	OUTDOOR EGRESS EMERGENCY LIGHT	LED	1300	20	120	ELECTRONIC	RIGHTED RE LIGHTING OR SIMILAR

ELECTRICAL NOTES

1. ALL WORK TO BE DONE ACCORDING WITH CALIFORNIA ELECTRICAL CODE 2013 EDITION.
2. EXISTING A/C UNITS, MOUNTED ON ROOF
3. NEW A/C UNITS, MOUNTED ON ROOF
4. RUN ONE 1/2" EMT CONDUIT FOR THE THERMOSTATS
5. EMT CONDUIT, RUN UNDER THE ROOF INSIDE THE BUILDING
6. EXTERIOR LIGHT FIXTURE CONTROL
   CIRCUIT B18 – TIMER
   CIRCUIT B20 – PHOTOCELL & RELAY
   INSTALL THE TIMER & THE LIGHTING RELAY IN AN ENCLOSURE NEXT TO THE SUBPANEL "B"
7. REPLACE TWO EXISTING SUBPANELS IN STUDY ROOM AREA, FOR A NEW SUBPANEL OF 42 CKTS. THREE PHASE, 120–240V, 225A, CAT. QO342L225G SQUARE D (OR SIMILAR)
8. REPLACE THE EXISTING SUBPANEL ("B") FOR A NEW SUBPANEL OF 42 CKTS. THREE PHASE, 120–240V, 225A CAT. QO342L225GRB SQUARE D (OR SIMILAR)
9. MOVE WIRING FOR THE EXISTING KITCHEN APPLIANCES FROM THE EXISTING SUBPANEL "D" TO THE NEW SUBPANEL "C"
10. PHASE B IS THE HIGH LEG. AND SHALL BE DURABLY AND PERMANENTLY MARKED BY AN OUTER FINISH THAT IS ORANGE IN COLOR, OR BY OTHER EFFECTIVE MEANS.
11. CHANGE THE RATING PLUG IN THE EXISTING MAIN CIRCUIT BREAKER, TO UPGRADE IT, FROM 3P–400A TO 3P–600A. MAIN CIRCUIT BREAKER FRAME CATALOG NUMBER SGHA36AT0600, GE. NEW RATING PLUG CATALOG NUMBER SRPG600A600, GE
12. CONNECT TO THE GENERAL LIGHTING AREA CIRCUITS THE CORRIDOR LIGHTS (2), EXIT SIGNS (2) & OUTDOOR EGRESS LIGHT
13. VERIFY THE RESISTANCE TO GROUND IT IS NOT MORE THAN 25 OHMS ANYTIME, USE SUPLEMENTAL ELECTRODES (METAL WATER PIPE, CONCRETE–ENCASED ELECTRODE OR METAL FRAME OF BUILDING) TO REDUCE RESISTENCE TO GROUND.

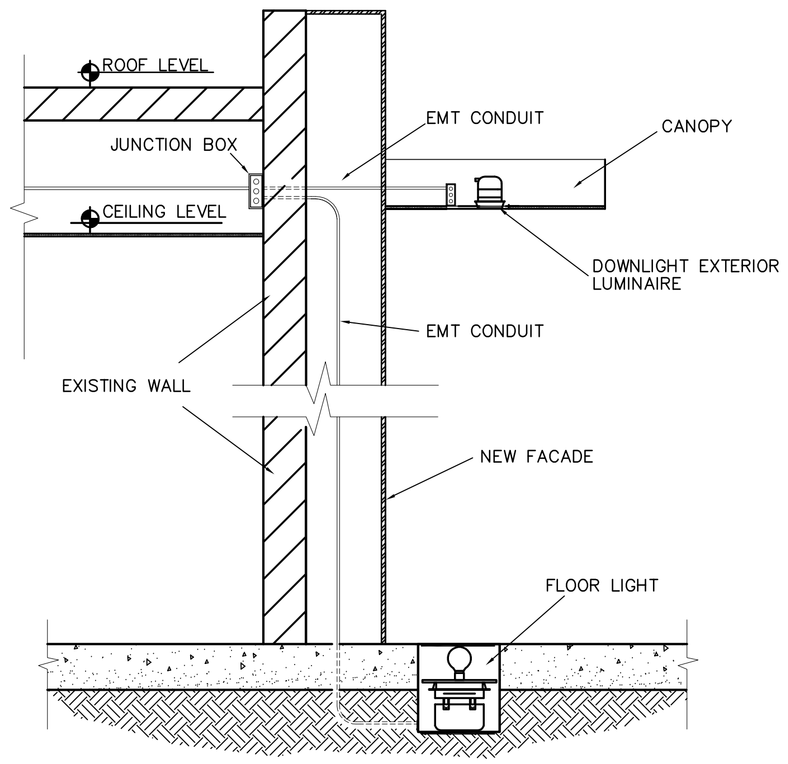

FLOOR & CANOPY LIGHTS DETAIL N.T.S.

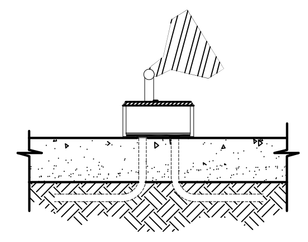

GARDEN LIGHT FIXTURE/ REFLECTOR DETAIL N.T.S.

FOR REFERENCE ONLY

SHEET: 4
OF: 4
DWN. BY: L.A.R.
REV. BY: R.L.
APP. BY: R.L.

LIBRARY EXPANSION PROJECT

EXTERIOR LIGHTING PLAN

IN THE CITY OF IMPERIAL, CALIFORNIA

DATE: 05/13/15

E04

REGISTERED PROFESSIONAL ENGINEER JESUS LUIS REYES LEVISTE NO. E 15446 ELECTRICAL STATE OF CALIFORNIA

SEAL:

BY: DATE:

R.C.E. NO. XXXXX

XXXXXX

REVISIONS

NO.	DESCRIPTION:	DATE:	BY:
1			
2			
3			

City of Imperial California